CONTRACT No. 1251/B

BOGGY CREEK, NOWA NOWA

180 DIA. WATERMAIN UPGRADE WORKS

DRG. No.	DESCRIPTION
3082/5000	LOCALITY PLAN AND DRAWING LIST
3082/5001	OVERALL ALIGNMENT AND CONSTRUCTION NOTES
3082/5002	ENVIRONMENTAL & CULTURAL PERMIT MANAGEMENT PLAN
3082/5003	OVERALL LAYOUT PLAN
3082/5004	DETAIL LAYOUT PLAN - SHEET 1 OF 3
3082/5005	DETAIL LAYOUT PLAN - SHEET 2 OF 3
3082/5006	DETAIL LAYOUT PLAN - SHEET 3 OF 3
3082/5007	ENLARGEMENT CONNECTION DETAIL No. 1
3082/5008	ENLARGEMENT CONNECTION DETAIL No. 2
3082/5009	LONGITUDINAL SECTIONS - SHEET 1 OF 2
3082/5010	LONGITUDINAL SECTIONS - SHEET 2 OF 2
3082/5011	BRIDGE CONNECTION DETAIL - SHEET 1 OF 2
3082/5012	BRIDGE CONNECTION DETAIL - SHEET 2 OF 2
3082/5013	STANDARD DETAILS - SHEET 1 OF 4
3082/5014	STANDARD DETAILS - SHEET 2 OF 4
3082/5015	STANDARD DETAILS - SHEET 3 OF 4
3082/5016	STANDARD DETAILS - SHEET 4 OF 4

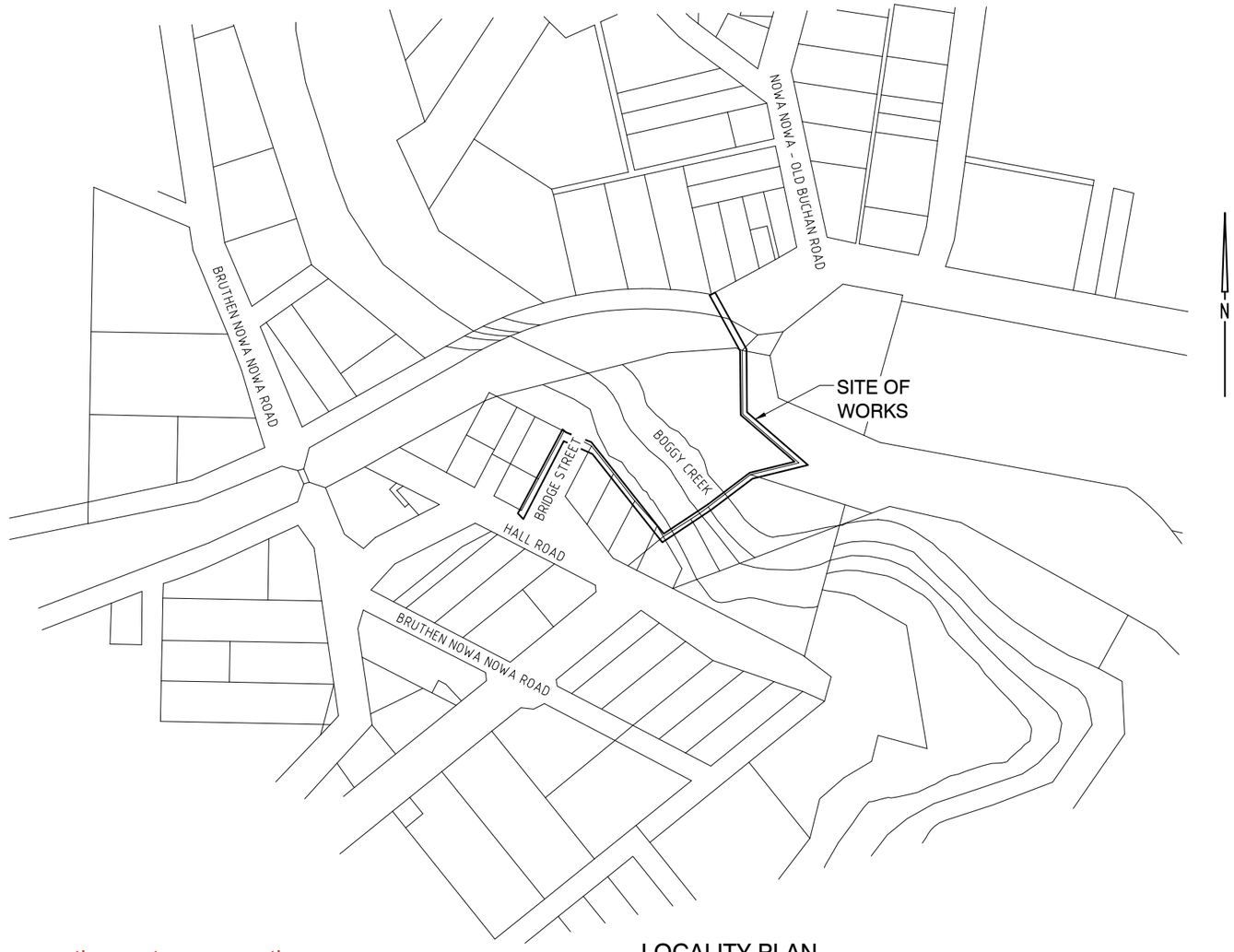

LOCALITY PLAN
NOT TO SCALE

NOTE: Please refer to the maps on the next pages as there was a slight relocation change from the map on this page (page 1)

Rv.	APPR.	DATE	REVISIONS
A	M.S.	23-04-2026	PRELIMINARY DESIGN - ISSUED FOR REVIEW

© Crossco Consulting Pty Ltd All Rights Reserved 2026.
Copyright in the whole and every part of this drawing belongs to Crossco Consulting Pty Ltd and may not be used, sold, transferred, copied or reproduced in whole or in part in any manner or form or on any media, to any person other than by agreement with Crossco Consulting Pty Ltd.

This document is produced by Crossco Consulting Pty Ltd solely for the benefit of and use by the client in accordance with the terms of the retainer. Crossco Consulting Pty Ltd does not and shall not assume any responsibility or liability whatsoever to any third party arising out of any use or reliance by third party on the content of this document.

Crossco Consulting Pty Ltd
ABN: 88 135 548 110
154 Macleod St
P.O. Box 858
Bairnsdale Vic 3875
Tel:(03) 51526298
Fax (03) 51527222
Email: consult@crossco.com.au

DESIGNED:	R.S.	A1	DATUM: HEIGHT: AHD HORIZONTAL: ARBITRARY
DRAWN:	A.M.M.		
CHECKED:	S.G.		
APPROVED:	M.S.	SURVEY REF:	-
SCALE:	NOT TO SCALE	PLAN No:	-

XREF ATTACHED: R:\3082 EGW Boggy Creek Nowa Nowa\ACAD\Xref\3082 EGW TB.dwg
CAD FILE NAME: R:\3082 EGW Boggy Creek Nowa Nowa\ACAD\Drg\3082-5000.dwg

EAST GIPPSLAND WATER
EAST GIPPSLAND WATER CONTRACT #1251/B
BOGGY CREEK, NOWA NOWA
180 DIA. WATERMAIN UPGRADE WORKS

LOCALITY PLAN AND DRAWING LIST

DATE: APRIL 2026
SHEET 1 OF 17
DRAWING No: 3082/5000
Rv. A

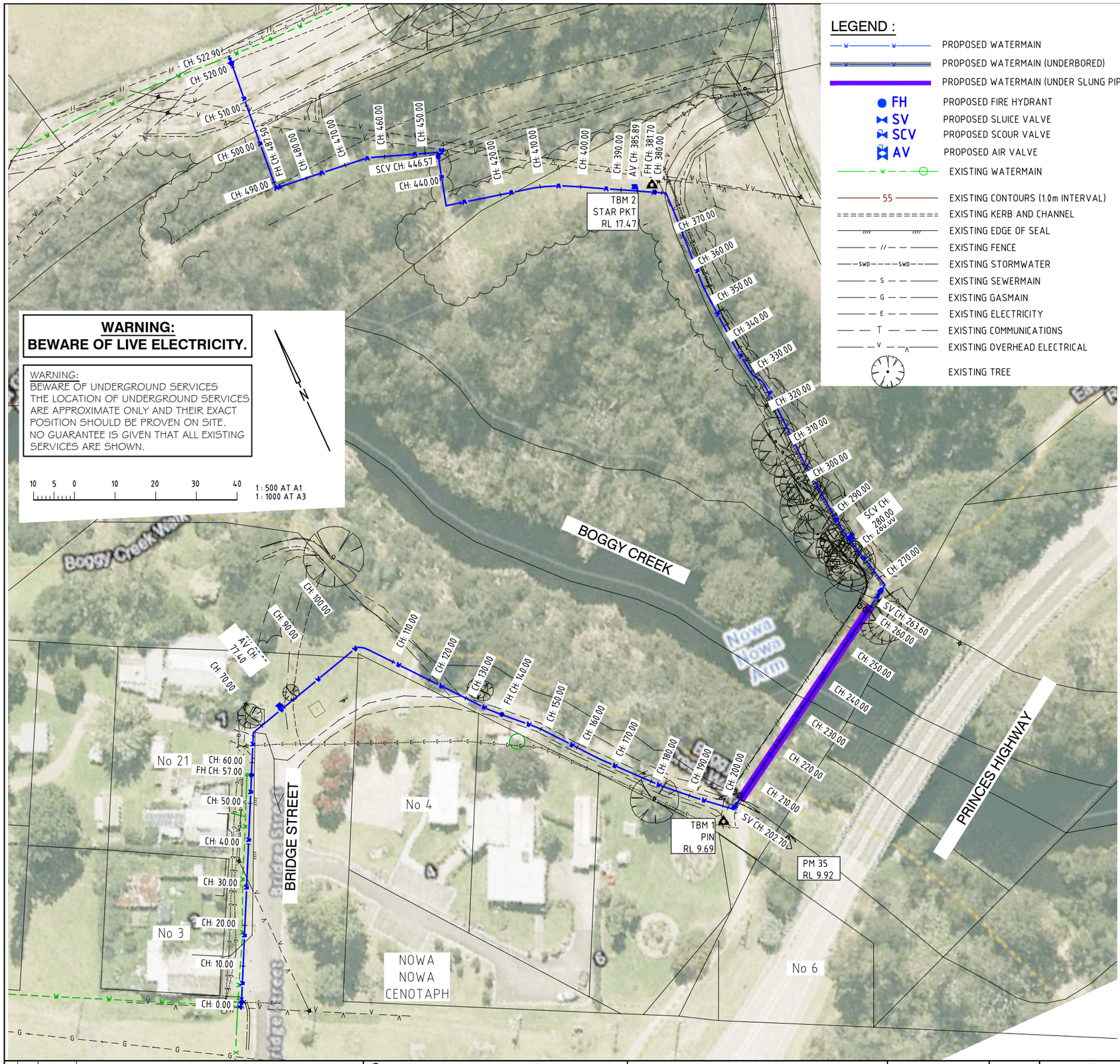

LEGEND :

- PROPOSED WATERMAIN
- PROPOSED WATERMAIN (UNDERBORED)
- PROPOSED WATERMAIN (UNDER SLUNG PIPE)
- FH — PROPOSED FIRE HYDRANT
- SV — PROPOSED SLUICE VALVE
- SCV — PROPOSED SCOUR VALVE
- AV — PROPOSED AIR VALVE
- EXISTING WATERMAIN
- 55 — EXISTING CONTOURS (1.0m INTERVAL)
- EXISTING KERB AND CHANNEL
- EXISTING EDGE OF SEAL
- EXISTING FENCE
- SWD — EXISTING STORMWATER
- S — EXISTING SEWERMAIN
- G — EXISTING GASMAIN
- E — EXISTING ELECTRICITY
- T — EXISTING COMMUNICATIONS
- V — EXISTING OVERHEAD ELECTRICAL
- EXISTING TREE

NOTES:

1. ALL WORKS TO BE CARRIED OUT IN ACCORDANCE WITH THE SPECIFICATION, DRAWINGS, EAST GIPPSLAND WATER REQUIREMENTS, WSA 01-2004 AND WSA 03-2011-3.1, INCLUDING BUT NOT LIMITED TO PRODUCT SPECIFICATIONS; PS 207 (PE) WATERMAIN PIPE, PS 215 (PE) PROPERTY SERVICE PIPES, PS 260 GATE VALVES, PS 267 HYDRANTS,
   PS 202 -DI FITTINGS AND PS 318 DETECTABLE MARKER TAPE
2. ALL PIPEWORK TO BE PE PN 16 UNLESS OTHERWISE NOTED.
3. ALL FITTINGS TO BE MINIMUM PN 16. FOR PIPE SIZES LESS THAN OR EQUAL TO DN63, ELECTROFUSION JOINTS ARE PERMITTED. BUTT WELDED JOINTS ARE REQUIRED FOR HDPE GREATER THAN OD63 UNLESS OTHERWISE NOTED. NO COMPRESSION COUPLINGS ARE ALLOWED.
4. WATERMAIN SHALL BE TESTED TO 1200KPA IN ACCORDANCE WITH EAST GIPPSLAND WATER REQUIREMENTS
5. ALL SERVICES ARE APPROXIMATE ONLY AND MUST BE VERIFIED BY THE CONTRACTOR PRIOR TO COMMENCEMENT OF WORKS INCLUDING PROPERTY WATER SERVICE CONNECTIONS. CLEARANCES FROM OTHER SERVICES MUST BE IN ACCORDANCE WITH TABLE 5.5 WSA 03-2011-3.2.
6. ANCHORAGE SHALL BE PROVIDED AT ALL CHANGES IN DIRECTION, TEES, CHANGE IN PIPE SIZE AND TERMINATION POINTS. BEARING AREA FOR ALL THRUST BLOCKS TO BE IN ACCORDANCE WITH TABLE 7.3 WSA 03-2011 3.1 (MPVC & PE SHALL BE TESTED TO 1600KPA).
7. IT IS THE CONTRACTOR'S RESPONSIBILITY TO PROVIDE ADEQUATE TRAFFIC CONTROL MEASURES IN ACCORDANCE WITH OCCUPATIONAL HEALTH AND SAFETY GUIDELINES.
8. IT IS THE CONTRACTOR'S RESPONSIBILITY TO OBTAIN ALL NECESSARY PERMITS TO CONSTRUCT THE WORKS.
9. PUDDLE FLANGES TO BE MACHINE GROOVED AND FACTORY FITTED TO PIPEWORK TO ENSURE THRUST RESTRAINT.
10. DETECTABLE MARKER TAPE TO BE PLACED ON TOP OF EMBEDMENT MATERIAL. REFER TO EAST GIPPSLAND WATER TECHNICAL BULLETIN TB005 FOR MORE DETAILS.
11. THE CONTRACTOR SHALL PLAN AND COORDINATE ALL CONNECTIONS TO THE EXISTING WATER MAIN IN ACCORDANCE WITH EGW STANDARD OPERATING PROCEDURE SOP 038 - "PLANNED SHUTDOWNS". AND EGW STANDARD OPERATING PROCEDURE SOP 079 - "REPAIR & REMOVAL OF ASBESTOS CEMENT PIPES".
12. SEDIMENT CONTROL STRUCTURES TO BE INSTALLED IN ACCORDANCE WITH THE SPECIFICATION AND TO THE APPROVAL OF THE SUPERINTENDENT.
13. ALL EQUIPMENT, PLANT AND ASSOCIATED MACHINERY MUST BE MADE FREE OF SOIL, SEED AND PLANT MATERIALS PRIOR TO ENTERING THE ROAD RESERVE TO PREVENT THE SPREAD OF WEEDS AND SOIL PATHOGENS.
14. ROAD PAVEMENT IS TO BE KEPT CLEAR AND CLEAN FROM ANY MATERIALS (SPOIL, MUD, GRAVEL, DEBRIS, SAND ETC.) THAT MAY REDUCE SKID RESISTANCE OR AFFECT MARKINGS. ANY MATERIAL SPILT OR TRACKED ONTO THE ROAD SURFACE MUST BE CLEANED OFF IMMEDIATELY.
15. FIRE HYDRANTS SHALL BE INSTALLED IN ACCORDANCE WITH EAST GIPPSLAND WATER TECHNICAL BULLETIN TB002 AND IN ACCORDANCE WITH CFA REQUIREMENTS CONTRACTOR TO ENSURE BLUE REFLECTORS, WHITE MARKERS AND MARK POSTERS ARE INSTALLED.
16. MARKER POSTS ARE TO BE INSTALL ADJACENT TO STOP VALVES, AIR VALVES, AND FIREPLUGS AS DIRECTED. REFER TO EAST GIPPSLAND WATER TECHNICAL BULLETIN TB003 FOR FURTHER DETAILS.
17. ALL WORKS ARE TO BE CONDUCTED IN ACCORDANCE WITH THE RELEVANT WORKSAFE COMPLIANCE CODES AND WORKSAFE CONDITIONS. CONTRACTOR MUST NOTIFY WORKSAFE WHEN REQUIRED TO UNDERTAKE WORKS IN ACCORDANCE WITH THE CODE.
18. WORK SAFE TO BE NOTIFY THREE (3) DAYS BEFORE CONSTRUCTION EXCAVATION WORKS INVOLVING
    A TRENCH (IF THE EXCAVATED DEPTH IS MORE THAN 1.5m)
    A SHAFT (IF THE EXCAVATED DEPTH IS MORE THAN 2.0m)
    A TUNNEL
19. CONTRACTOR TO UNDERTAKE WORKS IN ACCORDANCE WITH THEIR HSE MANAGEMENT PROCEDURES IN PARTICULAR HAZARDS INCLUDING BUT NOT LIMITED TO; WORKING NEAR UNDERGROUND AND OVERHEAD SERVICES, WORKING IN CONFINED SPACES AND TRENCHING GREATER THAN 1.5m (EXCAVATIONS VARY) INCLUDING SECURING TRENCHES AFTER EACH DAY, WORKING FROM HEIGHTS (WITH POTENTIAL TO FALL), BIOLOGICAL HAZARDS, CONTAMINATED, FLAMMABLE OR DANGEROUS ATMOSPHERES, UV EXPOSURE AND ADVERSE WEATHER, MANUAL HANDING, THE USE OF SUB CONTRACTORS AND WORKING IN CLOSE PROXIMITY TO THE PUBLIC. WORKING WITH/NEAR MOBILE PLANT AND EQUIPMENT, DRILLING MACHINE POSITION ADJACENT TRENCHES.
20. THE CONTRACTOR MUST PROVIDE CONSTRUCTION METHODOLOGY TO UNDER TAKE NEW CONSTRUCTIONS WORKS AND ENSURE THE CONTINUOUS SERVICE IS MAINTAIN. CONSTRUCTION METHODOLOGY SHALL INCLUDE BUT NOT LIMITED TO.
    - PROTECTION (IE; FLAGGING AND NO GO ZONE) TO NATIVE VEGETATION PROTECTION, CULTURAL HERITAGE SITE AREAS
    - SECURING OF SITE EACH DAY (TRENCHED COVERED, NIGHT TIME TRAFFIC MANAGEMENT ETC.
    - WORKING NEAR SERVICE AUTHORITY ASSETS (OVERHAED POWERLINES, HIGH PRESSURE GASMAIN, ETC.)
    - CUT AND DISPOSE OF ASBESTOS PIPES (COMPLYING TO EGW SOP 079)
    - MAXIMIZING OFFSETS AND CLEARANCES FROM EXISTING AND NEW SERVICES - (BORING AND OPEN TRENCH CONSTRUCTION)
    - WATER QUALITY MANAGEMENT AND TESTING
    - COMMISSIONING AND TESTING OF NEW WATERMAIN

Rv.	APPR.	DATE	REVISIONS
A	M.S.	23-04-2026	PRELIMINARY DESIGN - ISSUED FOR REVIEW

Crossco Consulting Pty Ltd All Rights Reserved 2026.
Copyright in the whole and every part of this drawing belongs to Crossco Consulting Pty Ltd and may not be used, sold, transferred, copied or reproduced in whole or in part in any manner or form or on any media, to any person other than by agreement with Crossco Consulting Pty Ltd.

This document is produced by Crossco Consulting Pty Ltd solely for the benefit of and use by the client in accordance with the terms of the retainer. Crossco Consulting Pty Ltd does not and shall not assume any responsibility or liability whatsoever to any third party arising out of any use or reliance by third party on the content of this document.

Crossco Consulting Pty Ltd
ABN: 88 135 548 110
154 Macleod St
P.O. Box 858
Bairnsdale Vic 3875
Tel:(03) 51526298
Fax (03) 51527222
Email: consult@crossco.com.au

CROSSCO ENGINEERING & ENVIRONMENTAL CONSULTANTS

East Gippsland Water

DESIGNED:	R.S.	A1	DATUM: HEIGHT: AHD HORIZONTAL: ARBITRARY
DRAWN:	A.M.M.		
CHECKED:	S.G.		
APPROVED:	M.S.	SURVEY REF:	-
SCALE:	1:500	PLAN No:	-

XREF ATTACHED: R:\3082 EGW Boggy Creek Nowa Nowa\ACAD\Xref\3082 EGW TB.dwg
CAD FILE NAME: R:\3082 EGW Boggy Creek Nowa Nowa\ACAD\Drg\3082-5001.dwg

EAST GIPPSLAND WATER
EAST GIPPSLAND WATER CONTRACT #1251/B
BOGGY CREEK, NOWA NOWA
180 DIA. WATERMAIN UPGRADE WORKS

OVERALL ALIGNMENT AND CONSTRUCTION NOTES

DATE: APRIL 2026
SHEET 2 OF 17
DRAWING No: 3082/5001
Rv. A

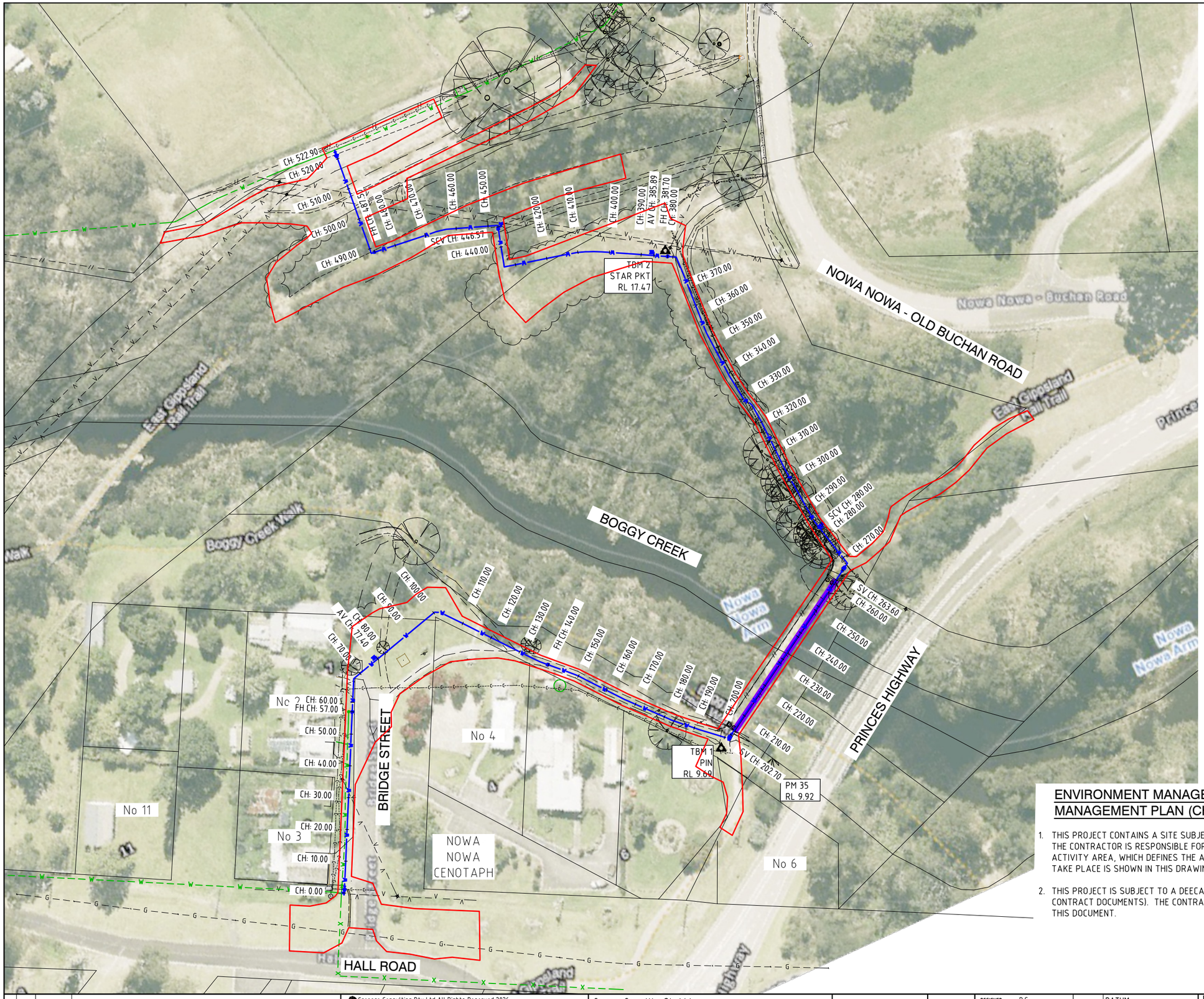

WARNING:
BEWARE OF LIVE ELECTRICITY.

WARNING:
BEWARE OF UNDERGROUND SERVICES
THE LOCATION OF UNDERGROUND SERVICES ARE APPROXIMATE ONLY AND THEIR EXACT POSITION SHOULD BE PROVEN ON SITE.
NO GUARANTEE IS GIVEN THAT ALL EXISTING SERVICES ARE SHOWN.

CONTRACTOR TO LOCATE AND DEPTH ALL SERVICES IN CLOSE PROXIMITY TO NEW AND EXISTING CONSTRUCTION PRIOR TO WORKS

STRICTLY NO VEGETATION IS TO BE REMOVED (OTHER THAN APPROVED VEGETATION IN THE CONSTRUCTION CLEAR LINE). SIGNIFICANT TREES AS IDENTIFIED IN THE VEGETATION PLAN BY TPZ SHOULD BE AVOIDED WHERE PRACTICAL. BORE LAUNCH AND RETRIEVAL EXCAVATION AREAS SHOULD PRIORITIES BY AVOIDING/RETAINING HIGHER QUALITY NATIVE PATCHES AND LARGER TREES IN PREFERENCE TO LOWER QUALITY VEGETATION.

NOTES:

1. FOR NOTES AND LEGEND REFER TO DRAWING No. 3082/5001

LEGEND :

- EXISTING TREE
- TPZ — TREE PROTECTION ZONE (TPZ)
- W — PROPOSED WATERMAIN
- CHMP ACTIVITY AREA

ENVIRONMENT MANAGEMENT & CULTURAL HERITAGE MANAGEMENT PLAN (CHMP) PLAN - NOTES:

1. THIS PROJECT CONTAINS A SITE SUBJECT TO CULTURAL HERITAGE MANAGEMENT PLAN No. 20938 THE CONTRACTOR IS RESPONSIBLE FOR COMPLYING WITH ALL ASPECTS OF THIS CHMP. THE CHMP ACTIVITY AREA, WHICH DEFINES THE AREA WHERE CONSTRUCTION AND ASSOCIATED ACTIVITIES MAY TAKE PLACE IS SHOWN IN THIS DRAWING.
2. THIS PROJECT IS SUBJECT TO A DEECA NATIVE VEGETATION REMOVAL ENDORSEMENT (CONTAINED IN CONTRACT DOCUMENTS). THE CONTRACTOR IS RESPONSIBLE FOR COMPLYING WITH ALL ASPECTS OF THIS DOCUMENT.

10 5 0 10 20 30 40
1 : 600 AT A1
1 : 1200 AT A3

Rv.	APPR.	DATE	REVISIONS
A	M.S.	23-04-2026	PRELIMINARY DESIGN - ISSUED FOR REVIEW

Crossco Consulting Pty Ltd All Rights Reserved 2026.
Copyright in the whole and every part of this drawing belongs to Crossco Consulting Pty Ltd and may not be used, sold, transferred, copied or reproduced in whole or in part in any manner or form or on any media, to any person other than by agreement with Crossco Consulting Pty Ltd.

This document is produced by Crossco Consulting Pty Ltd solely for the benefit of and use by the client in accordance with the terms of the retainer. Crossco Consulting Pty Ltd does not and shall not assume any responsibility or liability whatsoever to any third party arising out of any use or reliance by third party on the content of this document.

Crossco Consulting Pty Ltd
ABN: 88 135 548 110
154 Macleod St
P.O. Box 858
Bairnsdale Vic 3875
Tel:(03) 51526298
Fax (03) 51527222
Email: consult@crossco.com.au
CROSSCO ENGINEERING & ENVIRONMENTAL CONSULTANTS

East Gippsland Water

DESIGNED:	R.S.	A1	DATUM: HEIGHT: AHD HORIZONTAL: ARBITRARY
DRAWN:	A.M.M.		
CHECKED:	S.G.		
APPROVED:	M.S.	SURVEY REF:	-
SCALE:	1:500	PLAN No:	-

XREF ATTACHED: R:\3082 EGW Boggy Creek Nowa Nowa\ACAD\Xref\3082 EGW TB.dwg
CAD FILE NAME: R:\3082 EGW Boggy Creek Nowa Nowa\ACAD\Drg\3082-5002.dwg

EAST GIPPSLAND WATER
EAST GIPPSLAND WATER CONTRACT #1251/B
BOGGY CREEK, NOWA NOWA
180 DIA. WATERMAIN UPGRADE WORKS

ENVIRONMENTAL & CULTURAL HERITAGE MANAGEMENT PLANS

DATE: APRIL 2026
SHEET 3 OF 17
DRAWING No: 3082/5002
Rv. A

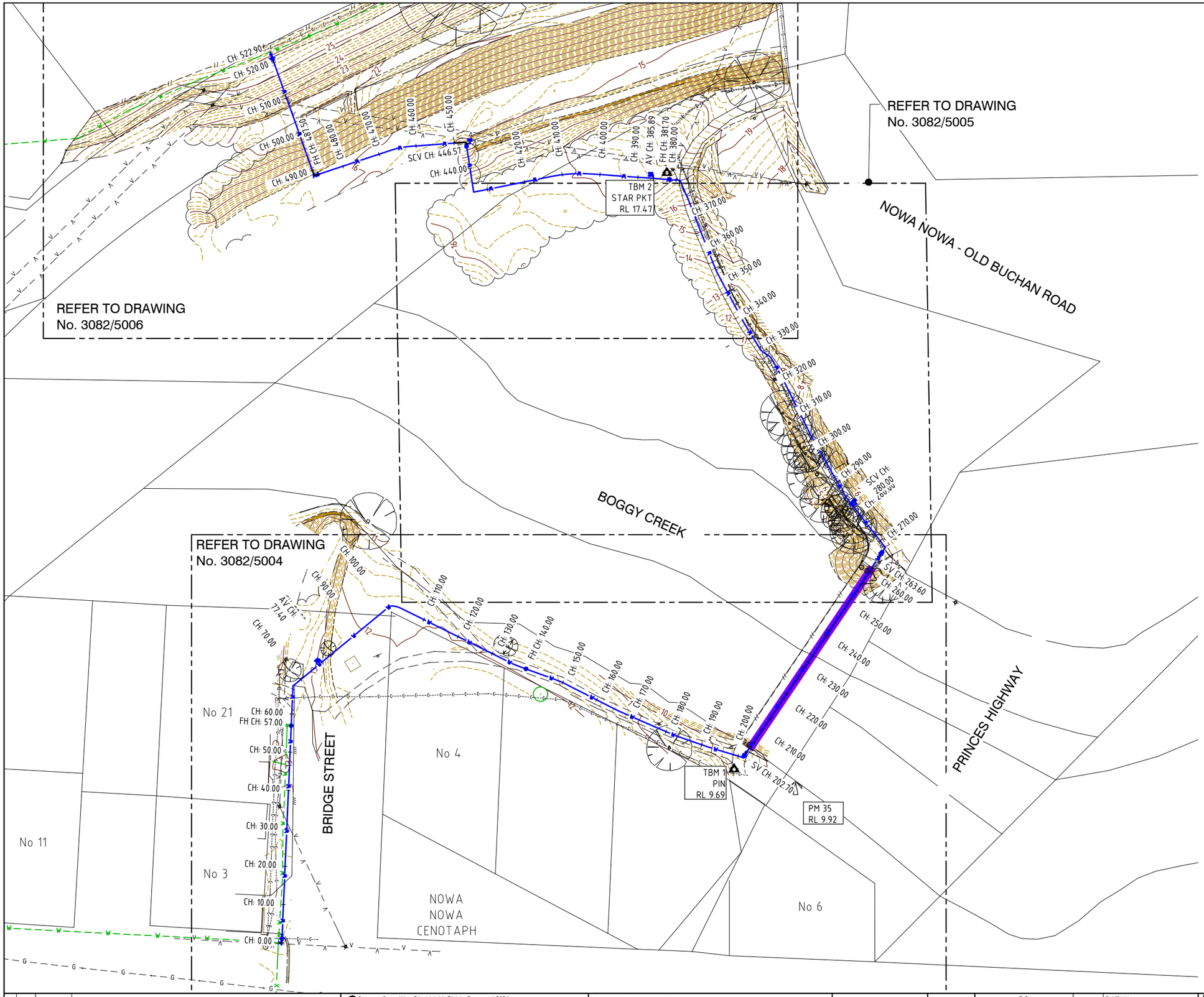

WARNING:
BEWARE OF LIVE ELECTRICITY.

WARNING:
BEWARE OF UNDERGROUND SERVICES
THE LOCATION OF UNDERGROUND SERVICES ARE APPROXIMATE ONLY AND THEIR EXACT POSITION SHOULD BE PROVEN ON SITE.
NO GUARANTEE IS GIVEN THAT ALL EXISTING SERVICES ARE SHOWN.

N

NOTES:

1. FOR NOTES AND LEGEND REFER TO DRAWING No. 3082/5001

10 5 0 10 20 30 40
1 : 500 AT A1
1 : 1000 AT A3

Rv.	APPR.	DATE	REVISIONS
A	M.S.	23-04-2026	PRELIMINARY DESIGN - ISSUED FOR REVIEW

© Crossco Consulting Pty Ltd All Rights Reserved 2026.
Copyright in the whole and every part of this drawing belongs to Crossco Consulting Pty Ltd and may not be used, sold, transferred, copied or reproduced in whole or in part in any manner or form or on any media, to any person other than by agreement with Crossco Consulting Pty Ltd.

This document is produced by Crossco Consulting Pty Ltd solely for the benefit of and use by the client in accordance with the terms of the retainer. Crossco Consulting Pty Ltd does not and shall not assume any responsibility or liability whatsoever to any third party arising out of any use or reliance by third party on the content of this document.

Crossco Consulting Pty Ltd
ABN: 88 135 548 110
154 Macleod St
P.O. Box 858
Bairnsdale Vic 3875
Tel:(03) 51526298
Fax (03) 51527222
Email: consult@crossco.com.au

CROSSCO ENGINEERING & ENVIRONMENTAL CONSULTANTS

East Gippsland Water

dlcs AS/NZS ISO 9001 Registered

DESIGNED:	R.S.	A1	DATUM: HEIGHT: AHD HORIZONTAL: ARBITRARY
DRAWN:	A.M.M.		
CHECKED:	S.G.		
APPROVED:	M.S.	SURVEY REF:	-
SCALE:	1:2500	PLAN No:	-

XREF ATTACHED: R:\3082 EGW Boggy Creek Nowa Nowa\ACAD\Xref\3082 EGW TB.dwg
CAD FILE NAME: R:\3082 EGW Boggy Creek Nowa Nowa\ACAD\Drg\3082-5003.dwg

EAST GIPPSLAND WATER
EAST GIPPSLAND WATER CONTRACT #1251/B
BOGGY CREEK, NOWA NOWA
180 DIA. WATERMAIN UPGRADE WORKS

OVERALL LAYOUT PLAN

DATE: APRIL 2026
SHEET 4 OF 17
DRAWING No: 3082/5003
Rv. A

Rv.	APPR.	DATE	REVISIONS
A	M.S.	23-04-2026	PRELIMINARY DESIGN - ISSUED FOR REVIEW

© Crossco Consulting Pty Ltd All Rights Reserved 2026.
Copyright in the whole and every part of this drawing belongs to Crossco Consulting Pty Ltd and may not be used, sold, transferred, copied or reproduced in whole or in part in any manner or form or on any media, to any person other than by agreement with Crossco Consulting Pty Ltd.

This document is produced by Crossco Consulting Pty Ltd solely for the benefit of and use by the client in accordance with the terms of the retainer. Crossco Consulting Pty Ltd does not and shall not assume any responsibility or liability whatsoever to any third party arising out of any use or reliance by third party on the content of this document.

Crossco Consulting Pty Ltd
ABN: 88 135 548 110
154 Macleod St
P.O. Box 858
Bairnsdale Vic 3875
Tel:(03) 51526298
Fax (03) 51527222
Email: consult@crossco.com.au

DESIGNED:	R.S.	A1	DATUM: HEIGHT: AHD HORIZONTAL: ARBITRARY
DRAWN:	A.M.M.		
CHECKED:	S.G.		
APPROVED:	M.S.	SURVEY REF:	-
SCALE:	1:250	PLAN No:	-

XREF ATTACHED: R:\3082 EGW Boggy Creek Nowa Nowa\ACAD\Xref\3082 EGW TB.dwg
CAD FILE NAME: R:\3082 EGW Boggy Creek Nowa Nowa\ACAD\Drg\3082-5004.dwg

EAST GIPPSLAND WATER
EAST GIPPSLAND WATER CONTRACT #1251/B
BOGGY CREEK, NOWA NOWA
180 DIA. WATERMAIN UPGRADE WORKS

DETAIL LAYOUT PLAN - SHEET 1 OF 3

DATE: APRIL 2026
SHEET 5 OF 17
DRAWING No: 3082/5004
Rv. A

WARNING:
BEWARE OF LIVE ELECTRICITY.

WARNING:
BEWARE OF UNDERGROUND SERVICES
THE LOCATION OF UNDERGROUND SERVICES ARE APPROXIMATE ONLY AND THEIR EXACT POSITION SHOULD BE PROVEN ON SITE.
NO GUARANTEE IS GIVEN THAT ALL EXISTING SERVICES ARE SHOWN.

CONTRACTOR TO LOCATE AND DEPTH ALL SERVICES IN CLOSE PROXIMITY TO NEW AND EXISTING CONSTRUCTION PRIOR TO WORKS

FOR CONTINUATION REFER TO DRAWING No. 3082/5006

FOR CONTINUATION REFER TO DRAWING No. 3082/5004

NOTES:

1. FOR NOTES AND LEGEND REFER TO DRAWING No. 3082/5001

10 5 0 10 20 1 : 250 (A1) 1 : 500 (A3)

Rv.	APPR.	DATE	REVISIONS
A	M.S.	23-04-2026	PRELIMINARY DESIGN - ISSUED FOR REVIEW

Crossco Consulting Pty Ltd All Rights Reserved 2026.
Copyright in the whole and every part of this drawing belongs to Crossco Consulting Pty Ltd and may not be used, sold, transferred, copied or reproduced in whole or in part in any manner or form or on any media, to any person other than by agreement with Crossco Consulting Pty Ltd.

This document is produced by Crossco Consulting Pty Ltd solely for the benefit of and use by the client in accordance with the terms of the retainer. Crossco Consulting Pty Ltd does not and shall not assume any responsibility or liability whatsoever to any third party arising out of any use or reliance by third party on the content of this document.

Crossco Consulting Pty Ltd
ABN: 88 135 548 110
154 Macleod St
P.O. Box 858
Bairnsdale Vic 3875
Tel:(03) 51526298
Fax (03) 51527222
Email: consult@crossco.com.au

CROSSCO ENGINEERING & ENVIRONMENTAL CONSULTANTS

East Gippsland Water

dlcs AS/NZS ISO 9001 certified

DESIGNED:	R.S.	A1	DATUM: HEIGHT: AHD HORIZONTAL: ARBITRARY
DRAWN:	A.M.M.		
CHECKED:	S.G.		
APPROVED:	M.S.	SURVEY REF:	-
SCALE:	1:250	PLAN No:	-

XREF ATTACHED: R:\3082 EGW Boggy Creek Nowa Nowa\ACAD\Xref\3082 EGW TB.dwg
CAD FILE NAME: R:\3082 EGW Boggy Creek Nowa Nowa\ACAD\Drg\3082-5005.dwg

EAST GIPPSLAND WATER
EAST GIPPSLAND WATER CONTRACT #1251/B
BOGGY CREEK, NOWA NOWA
180 DIA. WATERMAIN UPGRADE WORKS

DETAIL LAYOUT PLAN - SHEET 2 OF 3

DATE: APRIL 2026
SHEET 6 OF 17
DRAWING No: 3082/5005
Rv. A

WARNING:
BEWARE OF LIVE ELECTRICITY.

WARNING:
BEWARE OF UNDERGROUND SERVICES
THE LOCATION OF UNDERGROUND SERVICES ARE APPROXIMATE ONLY AND THEIR EXACT POSITION SHOULD BE PROVEN ON SITE.
NO GUARANTEE IS GIVEN THAT ALL EXISTING SERVICES ARE SHOWN.

CONTRACTOR TO LOCATE AND DEPTH ALL SERVICES IN CLOSE PROXIMITY TO NEW AND EXISTING CONSTRUCTION PRIOR TO WORKS

NOTES:

1. FOR NOTES AND LEGEND REFER TO DRAWING No. 3082/5001

10 5 0 10 20 1 : 250 (A1) 1 : 500 (A3)

FOR CONTINUATION REFER TO DRAWING No. 3082/5004

Rv.	APPR.	DATE	REVISIONS
A	M.S.	23-04-2026	PRELIMINARY DESIGN - ISSUED FOR REVIEW

Crossco Consulting Pty Ltd All Rights Reserved 2026.
Copyright in the whole and every part of this drawing belongs to Crossco Consulting Pty Ltd and may not be used, sold, transferred, copied or reproduced in whole or in part in any manner or form or on any media, to any person other than by agreement with Crossco Consulting Pty Ltd.

This document is produced by Crossco Consulting Pty Ltd solely for the benefit of and use by the client in accordance with the terms of the retainer. Crossco Consulting Pty Ltd does not and shall not assume any responsibility or liability whatsoever to any third party arising out of any use or reliance by third party on the content of this document.

Crossco Consulting Pty Ltd
ABN: 88 135 548 110
154 Macleod St
P.O. Box 858
Bairnsdale Vic 3875
Tel:(03) 51526298
Fax (03) 51527222
Email: consult@crossco.com.au
CROSSCO ENGINEERING & ENVIRONMENTAL CONSULTANTS

East Gippsland Water

DESIGNED:	R.S.	A1	DATUM: HEIGHT: AHD HORIZONTAL: ARBITRARY
DRAWN:	A.M.M.		
CHECKED:	S.G.		
APPROVED:	M.S.	SURVEY REF:	-
SCALE:	1:250	PLAN No:	-

XREF ATTACHED: R:\3082 EGW Boggy Creek Nowa Nowa\ACAD\Xref\3082 EGW TB.dwg
CAD FILE NAME: R:\3082 EGW Boggy Creek Nowa Nowa\ACAD\Drg\3082-5006.dwg

EAST GIPPSLAND WATER
EAST GIPPSLAND WATER CONTRACT #1251/B
BOGGY CREEK, NOWA NOWA
180 DIA. WATERMAIN UPGRADE WORKS

DETAIL LAYOUT PLAN - SHEET 3 OF 3

DATE: APRIL 2026
SHEET 7 OF 17
DRAWING No: 3082/5006
Rv. A

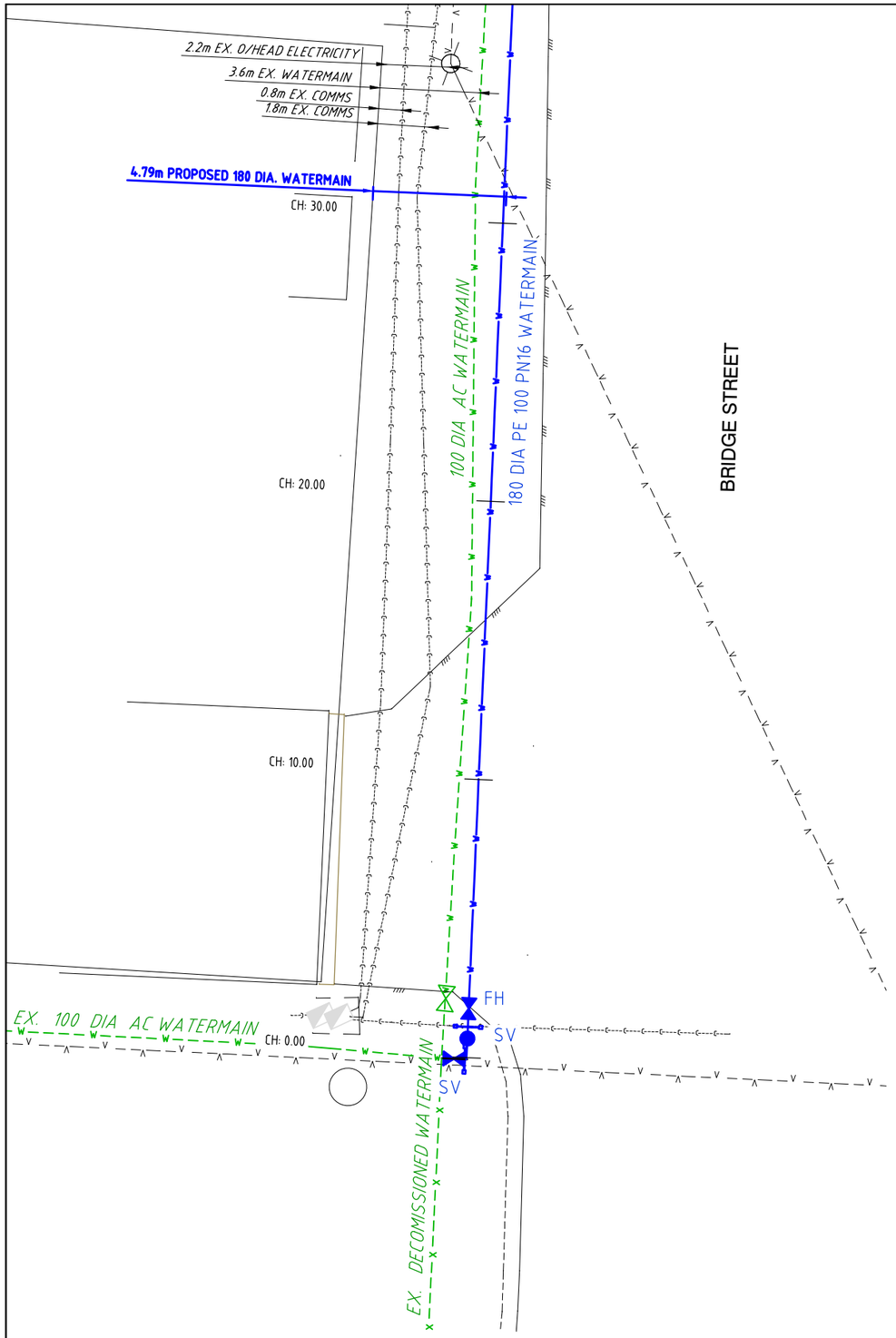

CONNECTION TO EXISTING WATERMAIN

DETAIL No. 1 - BRIDGE STREET CONNECTION

SCALE 1 : 100

REFER TO DRAWING No. 3082/5004

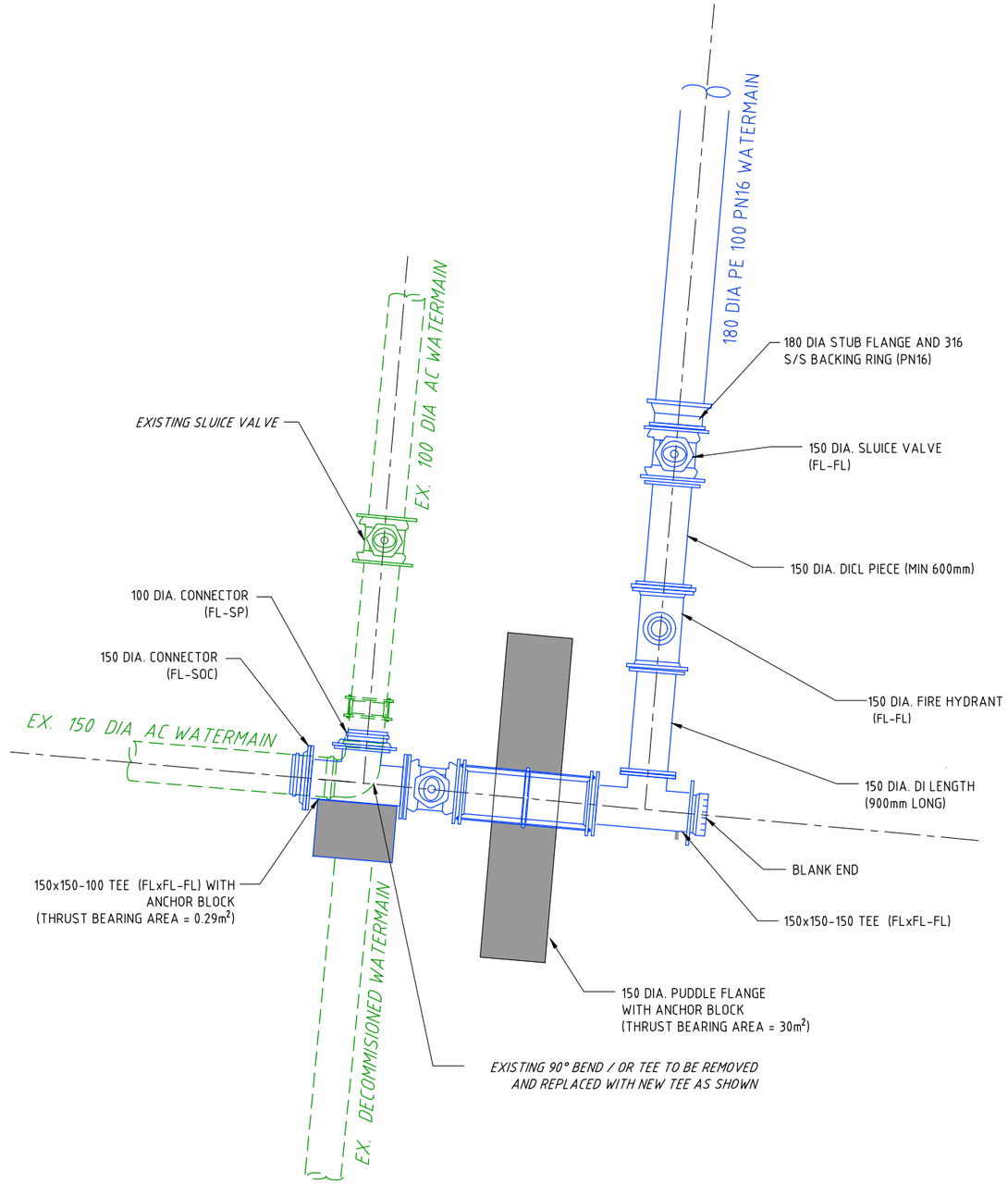

CONNECTION TO EXISTING WATERMAIN

DETAIL No. 1 - BRIDGE STREET CONNECTION

NOT TO SCALE

NOTES:

1. FOR NOTES AND LEGEND REFER TO DRAWING No. 3082/5001

2 1 0 2 4 6 8

1 : 100 (A1)
1 : 200 (A3)

Rv.	APPR.	DATE	REVISIONS
A	M.S.	23-04-2026	PRELIMINARY DESIGN - ISSUED FOR REVIEW

Crossco Consulting Pty Ltd All Rights Reserved 2026.
Copyright in the whole and every part of this drawing belongs to Crossco Consulting Pty Ltd and may not be used, sold, transferred, copied or reproduced in whole or in part in any manner or form or on any media, to any person other than by agreement with Crossco Consulting Pty Ltd.

This document is produced by Crossco Consulting Pty Ltd solely for the benefit of and use by the client in accordance with the terms of the retainer. Crossco Consulting Pty Ltd does not and shall not assume any responsibility or liability whatsoever to any third party arising out of any use or reliance by third party on the content of this document.

Crossco Consulting Pty Ltd
ABN: 88 135 548 110
154 Macleod St
P.O. Box 858
Bairnsdale Vic 3875
Tel:(03) 51526298
Fax (03) 51527222
Email: consult@crossco.com.au

DESIGNED:	R.S.	A1	DATUM: HEIGHT: AHD HORIZONTAL: ARBITRARY
DRAWN:	A.M.M.		
CHECKED:	S.G.		
APPROVED:	M.S.	SURVEY REF:	-
SCALE:	1:100	PLAN No:	-

XREF ATTACHED: R:\3082 EGW Boggy Creek Nowa Nowa\ACAD\Xref\3082 EGW TB.dwg
CAD FILE NAME: R:\3082 EGW Boggy Creek Nowa Nowa\ACAD\Drg\3082-5007.dwg

EAST GIPPSLAND WATER
EAST GIPPSLAND WATER CONTRACT #1251/B
BOGGY CREEK, NOWA NOWA
180 DIA. WATERMAIN UPGRADE WORKS

ENLARGEMENT CONNECTION DETAIL No. 1

DATE: APRIL 2026
SHEET 8 OF 17
DRAWING No: 3082/5007
Rv. A

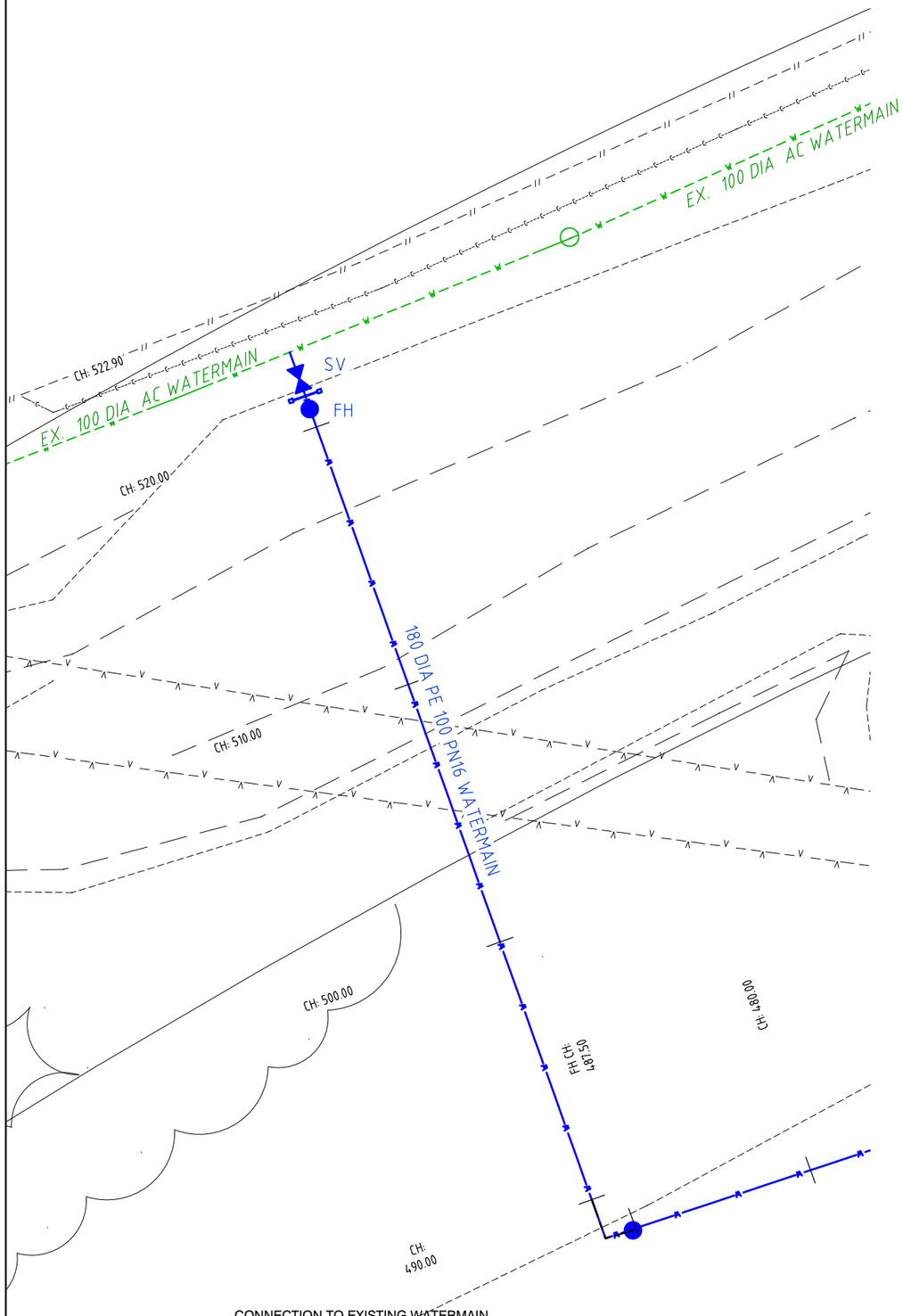

CONNECTION TO EXISTING WATERMAIN

DETAIL No. 1 - BRIDGE STREET CONNECTION

SCALE 1 : 100

REFER TO DRAWING No. 3082/5004

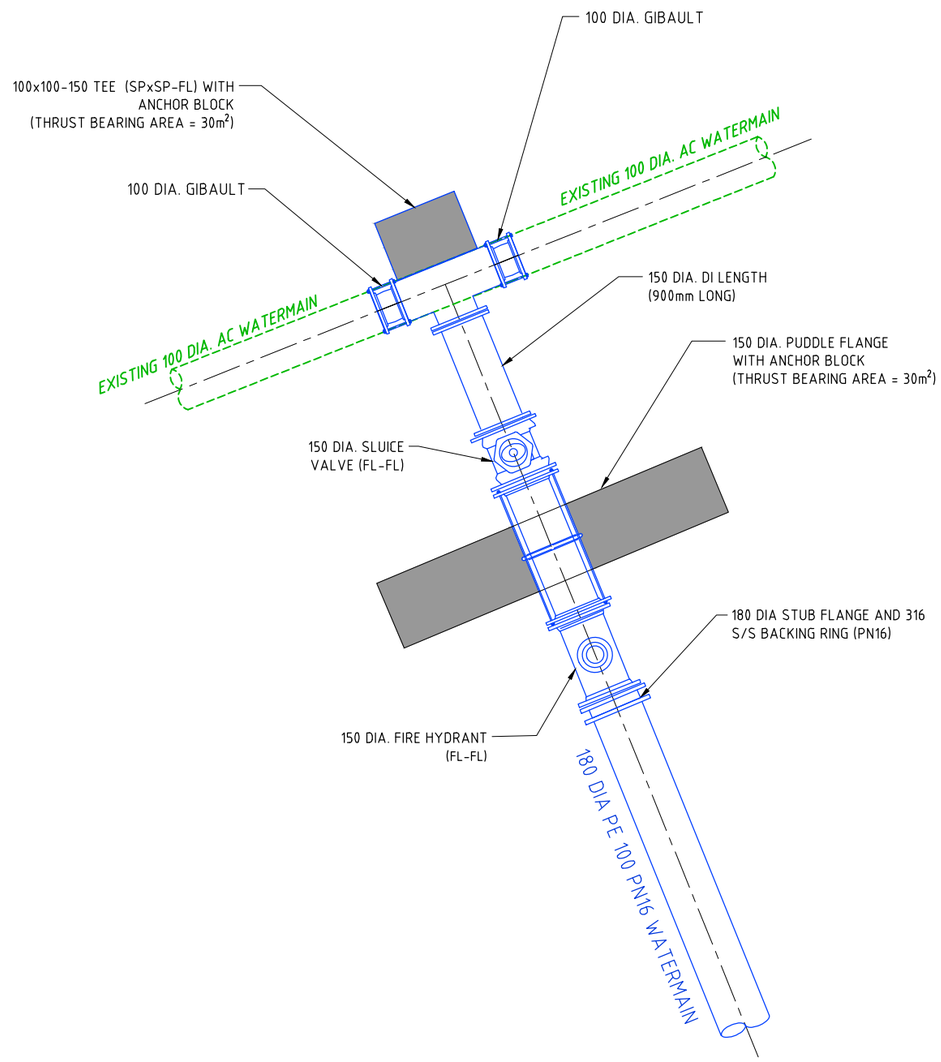

CONNECTION TO EXISTING WATERMAIN

DETAIL No. 1 - BRIDGE STREET CONNECTION

NOT TO SCALE

NOTES:

1. FOR NOTES AND LEGEND REFER TO DRAWING No. 3082/5001

2 1 0 2 4 6 8

1 : 100 (A1)
1 : 200 (A3)

Rv.	APPR.	DATE	REVISIONS
A	M.S.	23-04-2026	PRELIMINARY DESIGN - ISSUED FOR REVIEW

Crossco Consulting Pty Ltd All Rights Reserved 2026.
Copyright in the whole and every part of this drawing belongs to Crossco Consulting Pty Ltd and may not be used, sold, transferred, copied or reproduced in whole or in part in any manner or form or on any media, to any person other than by agreement with Crossco Consulting Pty Ltd.

This document is produced by Crossco Consulting Pty Ltd solely for the benefit of and use by the client in accordance with the terms of the retainer. Crossco Consulting Pty Ltd does not and shall not assume any responsibility or liability whatsoever to any third party arising out of any use or reliance by third party on the content of this document.

Crossco Consulting Pty Ltd
ABN: 88 135 548 110
154 Macleod St
P.O. Box 858
Bairnsdale Vic 3875
Tel:(03) 51526298
Fax (03) 51527222
Email: consult@crossco.com.au

DESIGNED:	R.S.	A1	DATUM: HEIGHT: AHD HORIZONTAL: ARBITRARY
DRAWN:	A.M.M.		
CHECKED:	S.G.		
APPROVED:	M.S.	SURVEY REF:	-
SCALE:	1:100	PLAN No:	-

XREF ATTACHED: R:\3082 EGW Boggy Creek Nowa Nowa\ACAD\Xref\3082 EGW TB.dwg
CAD FILE NAME: R:\3082 EGW Boggy Creek Nowa Nowa\ACAD\Drg\3082-5008.dwg

EAST GIPPSLAND WATER
EAST GIPPSLAND WATER CONTRACT #1251/B
BOGGY CREEK, NOWA NOWA
180 DIA. WATERMAIN UPGRADE WORKS

ENLARGEMENT CONNECTION DETAIL No. 1

DATE: APRIL 2026
SHEET 9 OF 17
DRAWING No: 3082/5008
Rv. A

TRENCHING NOTES: MINIMUM VERTICAL AND HORIZONTAL CLEARANCES SHALL BE MAINTAIN. REFER TO WSA WATER CODE - CLEARANCES BETWEEN WATERS AND OTHER UNDERGROUND SERVICES IN ACCORDANCE WITH TABLE 5.5 WSA 03-2011-3.2. BEDDING MATERIAL SHALL COMPLY WITH EITHER WSA PS - 350, 361 OR 362, FROM THE WSA PRODUCT SPECIFICATIONS, REFER TO SPECIFICATION FOR COMPACTION STANDARDS. AND TRENCH DEPTH SHALL MAINTAIN A MINIMUM COVER >800

NOTES:

1. FOR NOTES AND LEGEND REFER TO DRAWING No. 2757/5001
2. ALL SERVICES ARE APPROXIMATE ONLY AND MUST BE VERIFIED BY THE CONTRACTOR PRIOR TO COMMENCEMENT OF WORKS INCLUDING PROPERTY WATER SERVICE CONNECTIONS. CLEARANCES FROM OTHER SERVICES MUST BE IN ACCORDANCE WITH TABLE 5.5 WSA 03-2011-3.2.

CONTRACTOR TO LOCATE AND DEPTH ALL SERVICES SERVICE PROOFING WILL BE UNDERTAKEN PRIOR TO WORKS TO AVOID IMPACTING EXISTING SERVICES IN CLOSE PROXIMITY TO NEW AND EXISTING CONSTRUCTION PRIOR TO WORKS

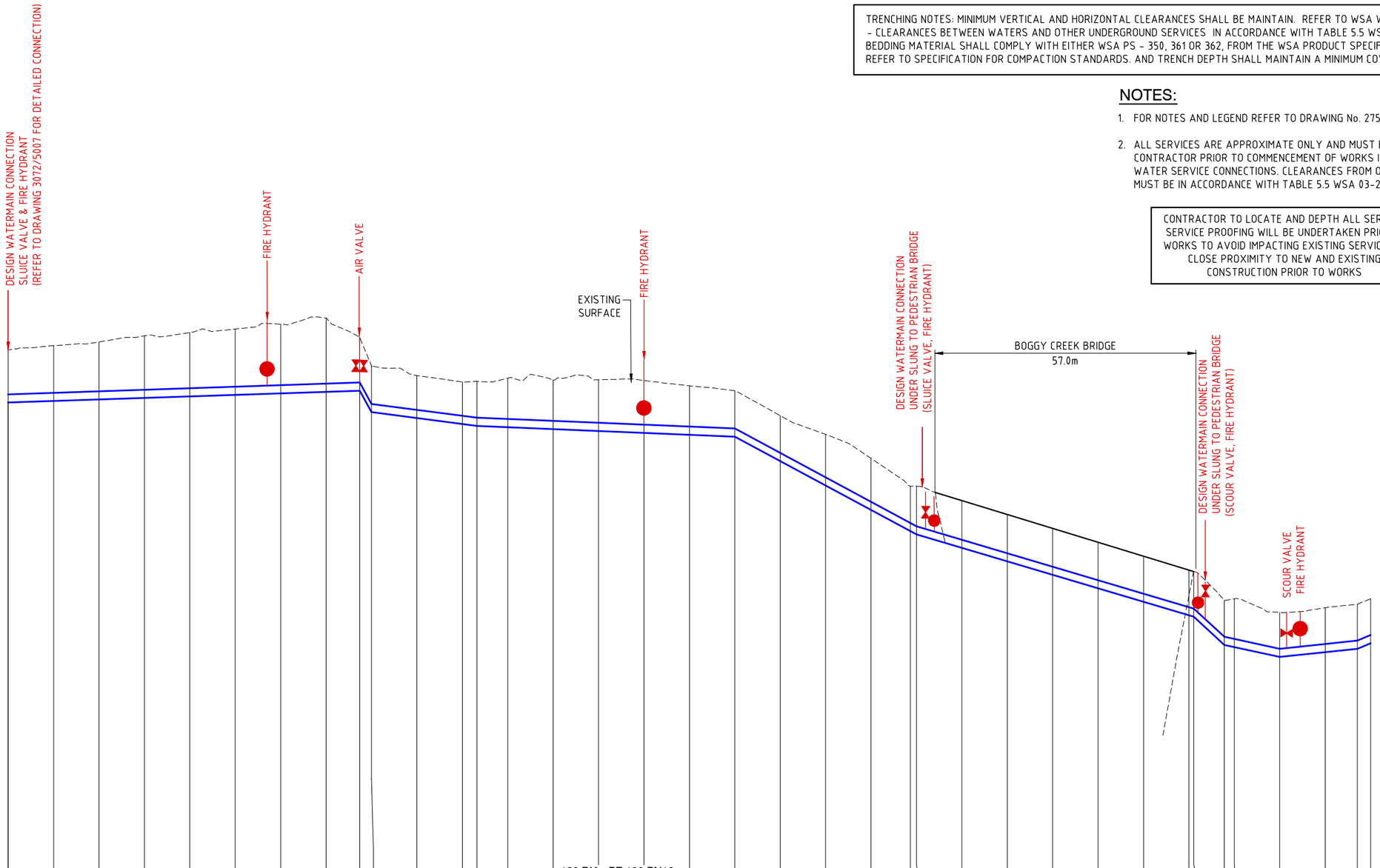

Datum 0.000m

DEPTH TO INVERT	1.16	1.22	1.27	1.37	1.41	1.45	1.52	1.63	1.18	1.02	0.94	0.93	0.98	1.08	1.09	1.13	1.16	1.08	1.01	1.00	1.13	1.14	0.98	1.03	1.01	1.01	1.01	1.00	1.00	0.99	0.99	0.98	1.07	0.98	0.98	0.98	0.98
EXISTING SURFACE	12.58	12.67	12.75	12.89	12.96	13.04	13.14	13.28	12.86	12.23	12.01	11.87	11.88	11.95	11.92	11.92	11.91	11.79	11.68	11.13	10.72	10.19	9.57	9.58	9.26	8.95	8.65	8.34	8.04	7.73	7.70	7.06	7.10	6.80	6.90	6.98	7.10
INVERT WATERMAIN	11.42	11.45	11.49	11.52	11.55	11.59	11.62	11.65	11.68	11.21	11.08	10.95	10.90	10.88	10.83	10.79	10.75	10.71	10.67	10.13	9.59	9.06	8.59	8.55	8.25	7.94	7.64	7.34	7.04	6.74	6.70	6.08	6.04	5.82	5.92	6.00	6.12
CHAINAGE	0.00	10.00	20.00	30.00	40.00	50.00	60.00	70.00	77.40	80.00	90.00	100.00	103.22	110.00	120.00	130.00	140.00	150.00	160.00	170.00	180.00	190.00	198.66	200.00	210.00	220.00	230.00	240.00	250.00	260.00	261.05	267.79	270.00	280.00	290.00	297.08	300.00

HOR. 10 5 0 10 20 30 40
VERT. 2 1 0 2 4 6 8

1 : 500 (A1)
1 : 1000 (A3)
1 : 100 (A1)
1 : 200 (A3)

Rv.	APPR.	DATE	REVISIONS
A	M.S.	23-04-2026	PRELIMINARY DESIGN - ISSUED FOR REVIEW

© Crossco Consulting Pty Ltd All Rights Reserved 2026.
Copyright in the whole and every part of this drawing belongs to Crossco Consulting Pty Ltd and may not be used, sold, transferred, copied or reproduced in whole or in part in any manner or form or on any media, to any person other than by agreement with Crossco Consulting Pty Ltd.

This document is produced by Crossco Consulting Pty Ltd solely for the benefit of and use by the client in accordance with the terms of the retainer. Crossco Consulting Pty Ltd does not and shall not assume any responsibility or liability whatsoever to any third party arising out of any use or reliance by third party on the content of this document.

Crossco Consulting Pty Ltd
ABN: 88 135 548 110
154 Macleod St
P.O. Box 858
Bairnsdale Vic 3875
Tel:(03) 51526298
Fax (03) 51527222
Email: consult@crossco.com.au

DESIGNED:	R.S.	A1	DATUM: HEIGHT: AHD HORIZONTAL: ARBITRARY
DRAWN:	A.M.M.		
CHECKED:	S.G.		
APPROVED:	M.S.	SURVEY REF:	-
SCALE:	AS SHOWN	PLAN No:	-

XREF ATTACHED: R:\3082 EGW Boggy Creek Nowa Nowa\ACAD\Xref\3082 EGW TB.dwg
CAD FILE NAME: R:\3082 EGW Boggy Creek Nowa Nowa\ACAD\Drg\3082-5009.dwg

EAST GIPPSLAND WATER
EAST GIPPSLAND WATER CONTRACT #1251/B
BOGGY CREEK, NOWA NOWA
180 DIA. WATERMAIN UPGRADE WORKS

LONGITUDINAL SECTIONS - SHEET 1 OF 2

DATE: APRIL 2026
SHEET 10 OF 17
DRAWING No: 3082/5009
Rv. A

TRENCHING NOTES: MINIMUM VERTICAL AND HORIZONTAL CLEARANCES SHALL BE MAINTAIN. REFER TO WSA WATER CODE - CLEARANCES BETWEEN WATERS AND OTHER UNDERGROUND SERVICES IN ACCORDANCE WITH TABLE 5.5 WSA 03-2011-3.2. BEDDING MATERIAL SHALL COMPLY WITH EITHER WSA PS - 350, 361 OR 362, FROM THE WSA PRODUCT SPECIFICATIONS, REFER TO SPECIFICATION FOR COMPACTION STANDARDS. AND TRENCH DEPTH SHALL MAINTAIN A MINIMUM COVER >800

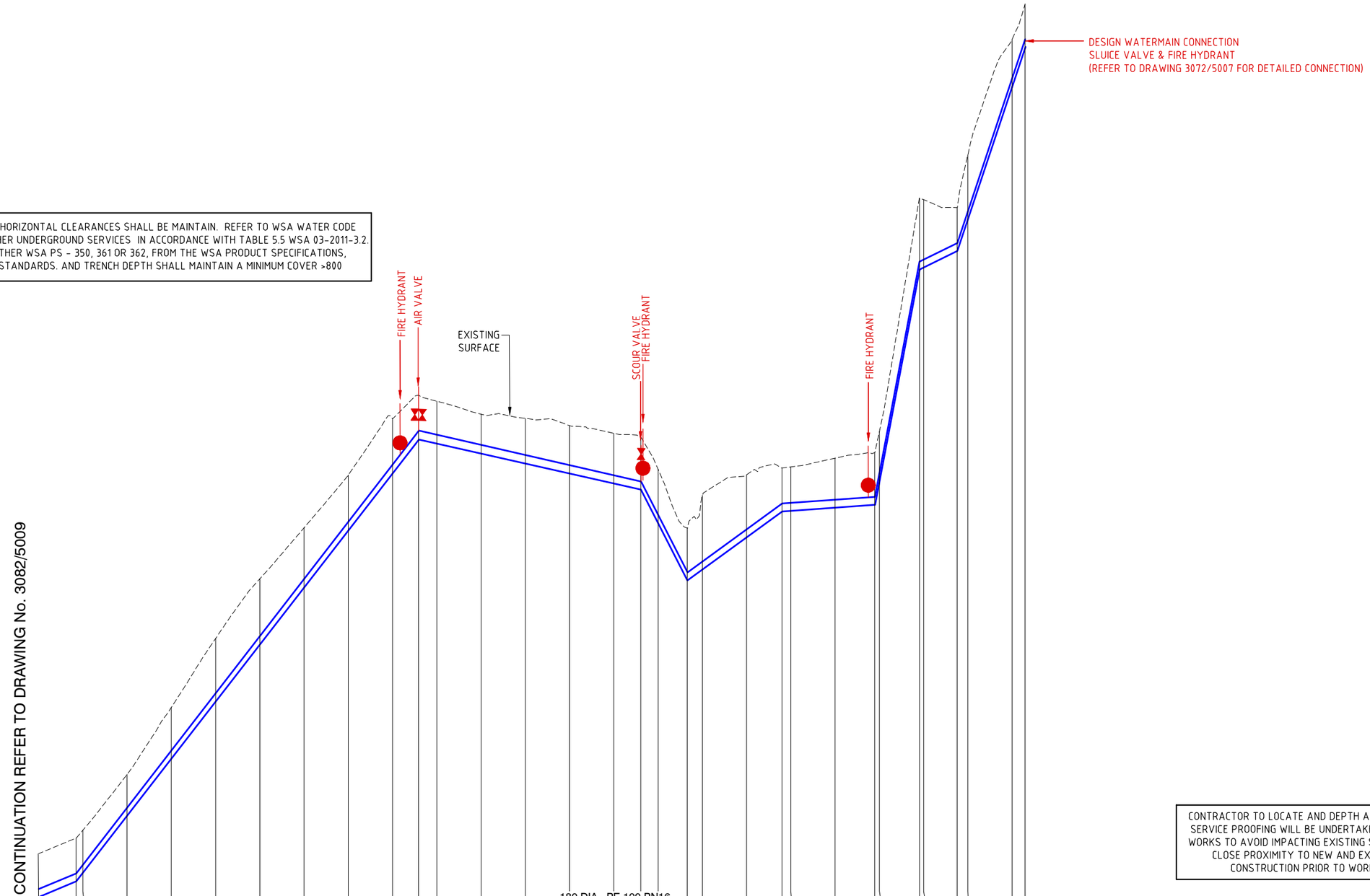

Datum 5.000m

| | | |

WARNING:
BEWARE OF LIVE ELECTRICITY.

WARNING:
BEWARE OF UNDERGROUND SERVICES
THE LOCATION OF UNDERGROUND SERVICES ARE APPROXIMATE ONLY AND THEIR EXACT POSITION SHOULD BE PROVEN ON SITE.
NO GUARANTEE IS GIVEN THAT ALL EXISTING SERVICES ARE SHOWN.

CONTRACTOR TO LOCATE AND DEPTH ALL SERVICES IN CLOSE PROXIMITY TO NEW AND EXISTING CONSTRUCTION PRIOR TO WORKS

NOTES:

1. FOR NOTES AND LEGEND REFER TO DRAWING No. 3082/5001

2 1 0 2 4 6 8
1 : 100 (A1)
1 : 200 (A3)

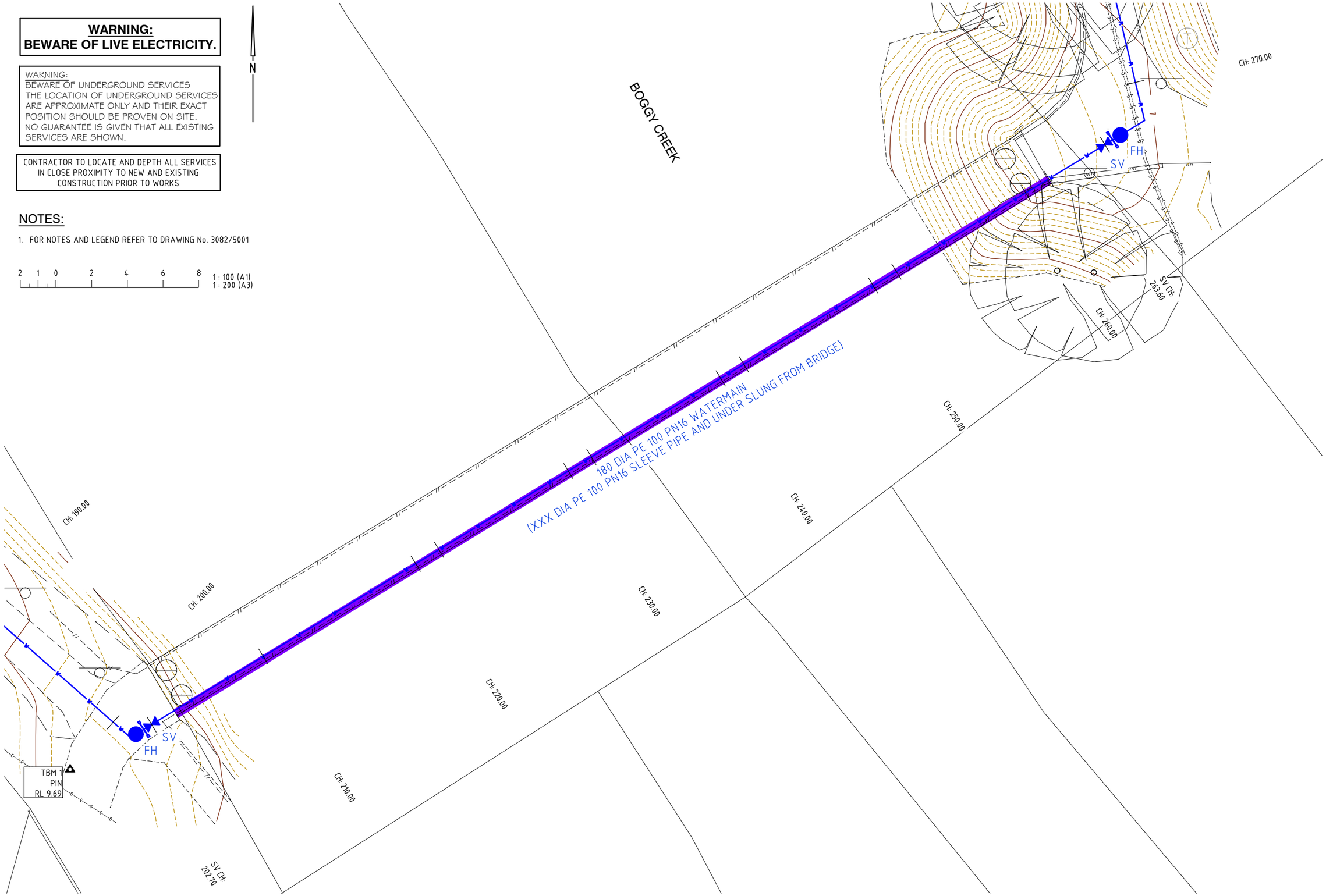

Rv.	APPR.	DATE	REVISIONS
A	M.S.	23-04-2026	PRELIMINARY DESIGN - ISSUED FOR REVIEW

Crossco Consulting Pty Ltd All Rights Reserved 2026.
Copyright in the whole and every part of this drawing belongs to Crossco Consulting Pty Ltd and may not be used, sold, transferred, copied or reproduced in whole or in part in any manner or form or on any media, to any person other than by agreement with Crossco Consulting Pty Ltd.

This document is produced by Crossco Consulting Pty Ltd solely for the benefit of and use by the client in accordance with the terms of the retainer. Crossco Consulting Pty Ltd does not and shall not assume any responsibility or liability whatsoever to any third party arising out of any use or reliance by third party on the content of this document.

Crossco Consulting Pty Ltd
ABN: 88 135 548 110
154 Macleod St
P.O. Box 858
Bairnsdale Vic 3875
Tel:(03) 51526298
Fax (03) 51527222
Email: consult@crossco.com.au

ENGINEERING & ENVIRONMENTAL CONSULTANTS

East Gippsland Water

DESIGNED:	R.S.	A1	DATUM: HEIGHT: AHD HORIZONTAL: ARBITRARY
DRAWN:	A.M.M.		
CHECKED:	S.G.		
APPROVED:	M.S.	SURVEY REF:	-
SCALE:	NOT TO SCALE	PLAN No:	-

XREF ATTACHED: R:\3082 EGW Boggy Creek Nowa Nowa\ACAD\Xref\3082 EGW TB.dwg
CAD FILE NAME: R:\3082 EGW Boggy Creek Nowa Nowa\ACAD\Drg\3082-5011.dwg

EAST GIPPSLAND WATER
EAST GIPPSLAND WATER CONTRACT #1251/B
BOGGY CREEK, NOWA NOWA
180 DIA. WATERMAIN UPGRADE WORKS

BRIDGE
CONNECTION DETAIL - SHEET 1 OF 2

DATE: APRIL 2026
SHEET 12 OF 17
DRAWING No: 3082/5011
Rv. A

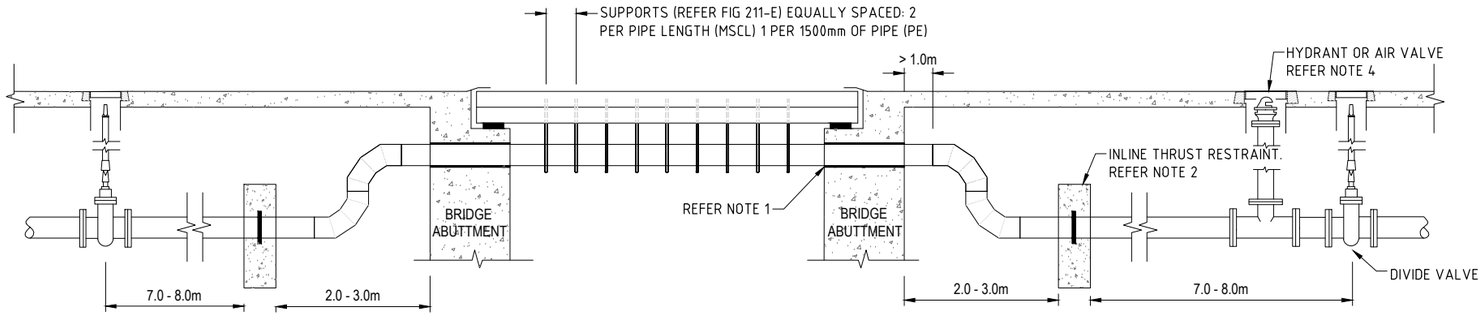

FIGURE 2011-A: PIPE BRIDGE CROSSING (LONG SECTION)

NOTES REGARDING FIGURE 211-A:

1. ALLOW FREE MOVEMENT OF PIPE IN ABUTMENT. WRAP PIPE IN NEOPRENE & INSERT PIPE THROUGH HOLE IN THE ABUTMENT.
2. LOCATE THRUST BLOCK AROUND WELDED ON THRUST RINGS OR DUCTILE IRON PUDDLE FLANGE AS PER MRWA-W-205A. LOCATE 2 TO 3 METRES AWAY FROM BRIDGE ABUTMENT.
3. LOCATE DIVIDE VALVES APPROXIMATELY 10m FROM BOTH SIDES OF THE BRIDGE, ENSURING NO CONNECTIONS TO THE MAIN IN BETWEEN THE 2 DIVIDE VALVES. VALVES WILL REQUIRE BYPASS VALVE AND PIPEWORK IF MAIN IS DN450 (REFER MRWA-W-105).
4. LOCATE HYDRANT OR AIR VALVE ON THE HIGH SIDE ADJACENT TO A DIVIDE VALVE TO FACILITATE CHARGING OF THE MAIN, DESIGNER TO DETERMINE MOST APPROPRIATE FITTING IN ACCORDANCE WITH MRWA-W-304.
5. TWO 45° DEGREE BENDS MAY BE USED INSTEAD OF TWO 90 DEGREE BENDS ADJACENT TO EACH ABUTMENT.

Rv.	APPR.	DATE	REVISIONS
A	M.S.	23-04-2026	PRELIMINARY DESIGN - ISSUED FOR REVIEW

Crossco Consulting Pty Ltd All Rights Reserved 2026.
Copyright in the whole and every part of this drawing belongs to Crossco Consulting Pty Ltd and may not be used, sold, transferred, copied or reproduced in whole or in part in any manner or form or on any media, to any person other than by agreement with Crossco Consulting Pty Ltd.

This document is produced by Crossco Consulting Pty Ltd solely for the benefit of and use by the client in accordance with the terms of the retainer. Crossco Consulting Pty Ltd does not and shall not assume any responsibility or liability whatsoever to any third party arising out of any use or reliance by third party on the content of this document.

Crossco Consulting Pty Ltd
ABN: 88 135 548 110
154 Macleod St
P.O. Box 858
Bairnsdale Vic 3875
Tel:(03) 51526298
Fax (03) 51527222
Email: consult@crossco.com.au

DESIGNED:	R.S.	A1	DATUM: HEIGHT: AHD HORIZONTAL: ARBITRARY
DRAWN:	A.M.M.		
CHECKED:	S.G.		
APPROVED:	M.S.	SURVEY REF:	-
SCALE:	NOT TO SCALE	PLAN No:	-

XREF ATTACHED: R:\3082 Wy Yung Acres - External works\ACAD\Xref\3082 EGW TB.dwg
CAD FILE NAME: R:\3082 EGW Boggy Creek Nowa Nowa\ACAD\Drg\3082-5012.dwg

EAST GIPPSLAND WATER
EAST GIPPSLAND WATER CONTRACT #1251/B
BOGGY CREEK, NOWA NOWA
180 DIA. WATERMAIN UPGRADE WORKS

BRIDGE
CONNECTION DETAIL - SHEET 2 OF 2

DATE: APRIL 2026
SHEET 13 OF 17
DRAWING No: 3082/5012
Rv. A

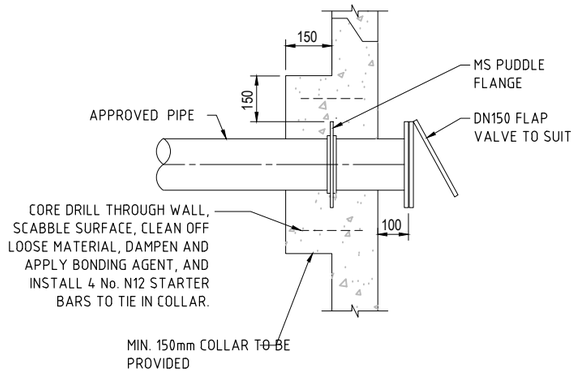

ENLARGEMENT DETAIL

NOT TO SCALE

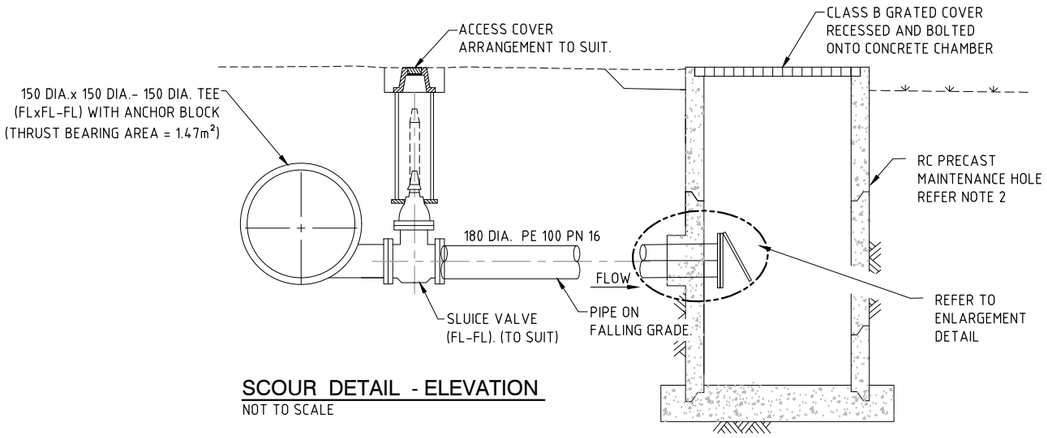

SCOUR DETAIL - ELEVATION

NOT TO SCALE

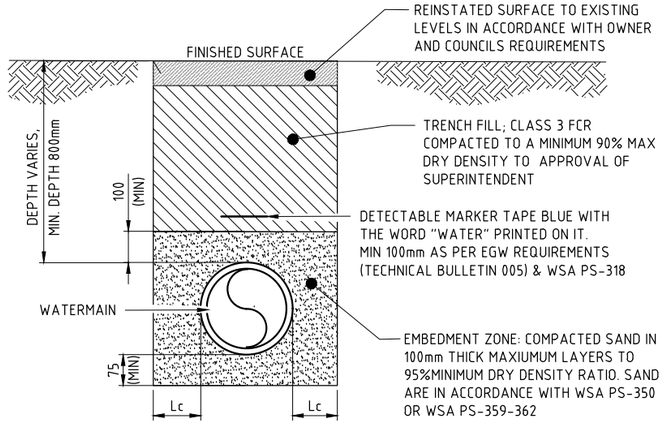

TYPICAL TRENCH DETAIL TRAFFICABLE LOCATIONS (SHOULDER)

TRAFFICABLE AREAS i.e. ROAD SHOULDERS

NOTES:

1. SCOUR OUTLEY TO DISCHARGE TO EXISTING GULLY, STORMWATER SYSTEM OR ROADSIDE DRAIN WHERE POSSIBLE, OR SCOUR PIT IF SPECIFIED.
2. FOR LOCATION OF SCOUR VALVE REFER TO LAYOUT PLANS OR AS DIRECTED BY SUPERINTENDENT.
3. IF A SCOUR PIT IS SPECIFIED, USE APPROVED ROCLA OR SIMILAR SCOUR PIT AND GRATED ACCESS COVER.
4. OUTLET OF SCOUR SHALL BE ASSESSED BY SUPERINTENDENT FOR EROSION POTENTIAL, AND BEACHING ROCK MAY BE REQUIRED AT OUTLET.

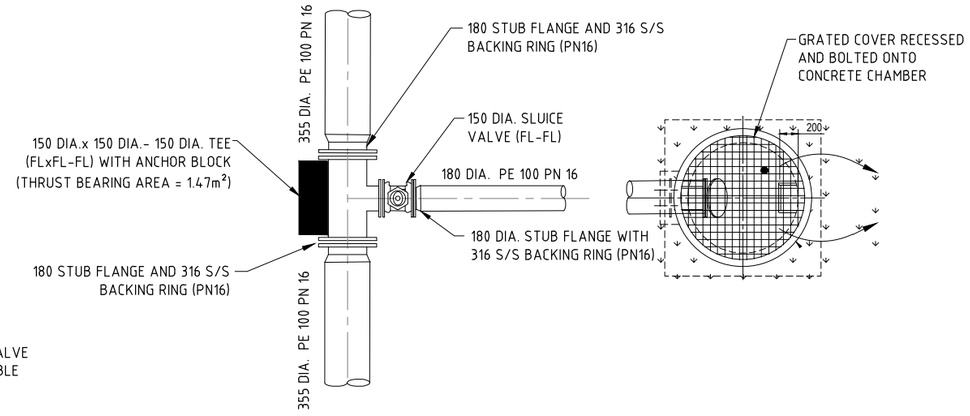

SCOUR CONNECTION DETAIL

NOT TO SCALE

REFER TO MRWA -W-307 SCOUR CONNECTION & FIGURE 307-A FOR MORE DETAILS

PIPE DN	Lc
50	100
63	100
100	100
150	100
180	150
200	150
225	150
300	150-200

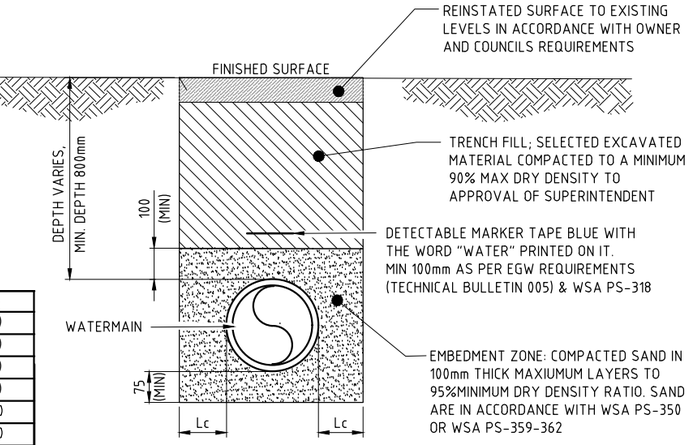

TYPICAL TRENCH DETAIL NON-TRAFFICABLE LOCATIONS

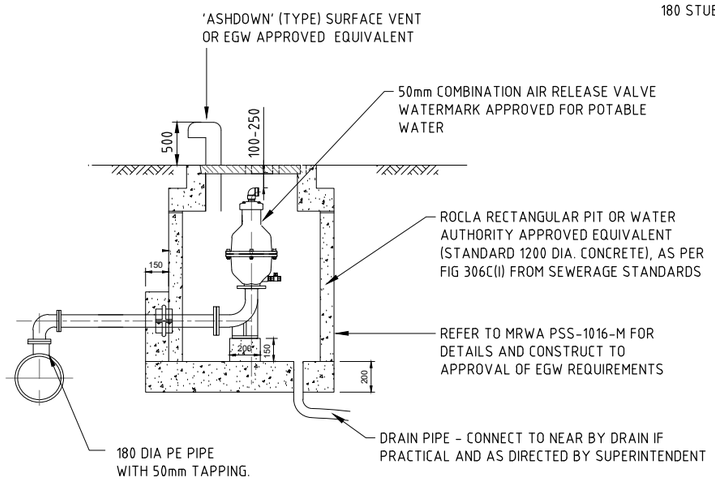

AIR RELEASE VALVE & PIT DETAIL

NOT TO SCALE

REFER TO MRWA -W-304 & 305 AIR VALVE AND AIR VLAVE ARRANGEMENTS FOR MORE DETAILS

NOTES:

1. APPROVED POLYMERIC OR CONCRETE SHAFT MAY BE USED AS PER GRAVITY SEWERAGE STANDARDS.
2. COVER SHOULD LIE 25mm ABOVE THE SURROUNDING NATURAL SURFACE LEVEL (NOT TO PROTRUDE EXCESSIVELY ABOVE GROUND). SURFACE LEVEL SHALL BE ABOVE THE 1 IN 100 YEAR FLOOD LEVEL.
3. REFER TO MRWA-W-305 FOR MORE DETAIL

		POSITION	
LOCATION	BEDDING	BACKFILL	SURFACE COURSE
NON-TRAFFICABLE AREAS i.e. RESERVES, ALLOTMENTS, NATURE STRIPS	10mm MAX. PARTICLE SIZE	SELECTED EXCAVATED MATERIAL (75mm MAX. STONE SIZE) COMPACTED TO A MINIMUM 90% MAX DRY DENSITY TO APPROVAL OF SUPERINTENDENT	TOPSOIL
ROAD CROSSINGS /DRIVEWAYS	10mm MAX. PARTICLE SIZE	CLASS 2 WET-MIX FCR COMPACTED TO 98% MODIFY DENSITY (150mm LAYERS) TO APPROVAL OF SUPERINTENDENT	TOP 300mm TO BE CL2 FCR COMPACTED IN 2 No 150mm LAYERS COMPACTED TO 98% MODIFIED DENSITY (SURFACE TO BE SAME AS EXISTING IE. ASPHALT OR SEAL)IF ASPHALT WEARING COURSE IS PLACED, PLACE AN EMULSION PRIMER SEAL PRIOR TO ASPHALTING. ALL EDGES & CORNERS TO BE SQUARED OUT & 40mm LAYER TYPE H ASPHALT PLACED.
ROAD SHOULDERS	10mm MAX. PARTICLE SIZE	CLASS 3 FCR TO COMPACTED TO A MINIMUM 90% MAX DRY DENSITY TO APPROVAL OF SUPERINTENDENT	TOP 200mm TO BE CL2 FCR COMPACTED IN 2 No 100mm LAYERS TO 98% MODIFIED DENSITY

BEDDING AND BACKFILLING MATERIALS

NOTE:

BEDDING MATERIAL SHALL COMPLY WITH EITHER WSA PS - 350, 361 OR 362, FROM THE WSA PRODUCT SPECIFICATIONS, REFER TO SPECIFICATION FOR COMPACTION STANDARDS.

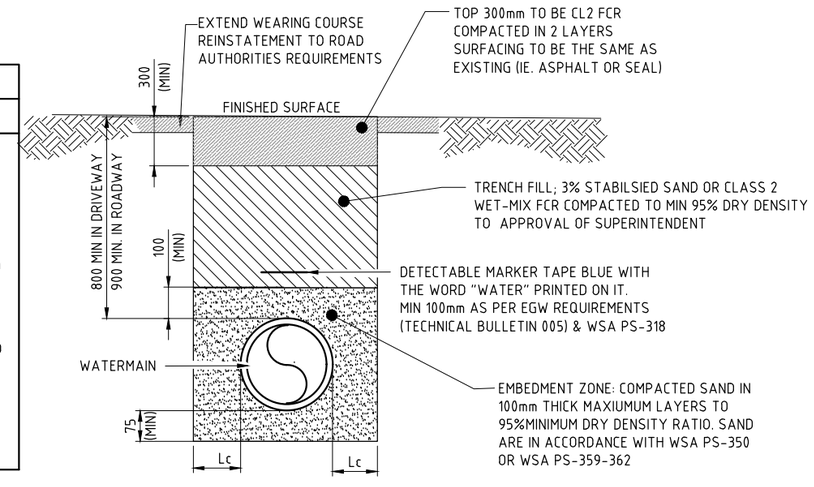

TYPICAL TRENCH DETAIL TRAFFICABLE LOCATIONS (ROAD)
BEDDING AND BACKFILLING MATERIALS

NOT TO SCALE

Rv.	APPR.	DATE	REVISIONS
A	M.S.	23-04-2026	PRELIMINARY DESIGN - ISSUED FOR REVIEW

Crossco Consulting Pty Ltd All Rights Reserved 2026.
Copyright in the whole and every part of this drawing belongs to Crossco Consulting Pty Ltd and may not be used, sold, transferred, copied or reproduced in whole or in part in any manner or form or on any media, to any person other than by agreement with Crossco Consulting Pty Ltd.

This document is produced by Crossco Consulting Pty Ltd solely for the benefit of and use by the client in accordance with the terms of the retainer. Crossco Consulting Pty Ltd does not and shall not assume any responsibility or liability whatsoever to any third party arising out of any use or reliance by third party on the content of this document.

Crossco Consulting Pty Ltd
ABN: 88 135 548 110
154 Macleod St
P.O. Box 858
Bairnsdale Vic 3875
Tel:(03) 51526298
Fax (03) 51527222
Email: consult@crossco.com.au

ENGINEERING & ENVIRONMENTAL CONSULTANTS

East Gippsland Water

DESIGNED:	R.S.	A1	DATUM: HEIGHT: AHD HORIZONTAL: ARBITRARY
DRAWN:	A.M.M.		
CHECKED:	S.G.		
APPROVED:	M.S.	SURVEY REF:	-
SCALE:	NOT TO SCALE	PLAN No:	-

XREF ATTACHED: R:\3082 EGW Boggy Creek Nowa Nowa\ACAD\Xref\3082 EGW TB.dwg
CAD FILE NAME: R:\3082 EGW Boggy Creek Nowa Nowa\ACAD\Drg\3082-5013.dwg

EAST GIPPSLAND WATER
EAST GIPPSLAND WATER CONTRACT #1251/B
BOGGY CREEK, NOWA NOWA
180 DIA. WATERMAIN UPGRADE WORKS

STANDARD DETAILS - SHEET 1 OF 4

DATE: APRIL 2026
SHEET 14 OF 17
DRAWING No: 3082/5013
Rv. A

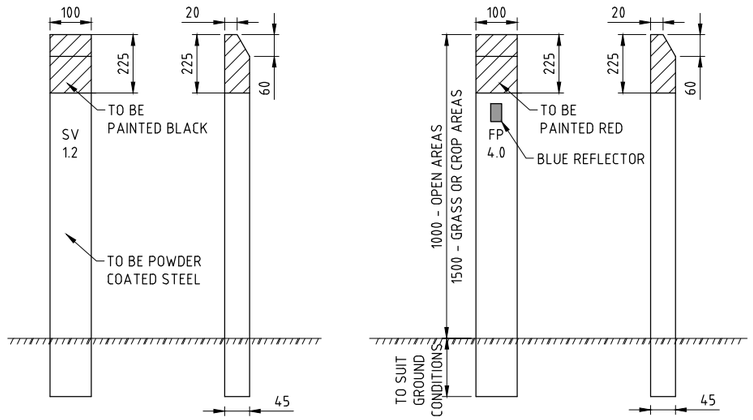

VALVE & FIRE PLUG MARKER POSTS

NOT TO SCALE

NOTES:

9. MARKER POSTS ARE TO BE INSTALLED ADJACENT TO STOP VALVES, VALVES AND FIREPLUG AS DIRECTED.

10. MARKER POSTS ARE TO BE MADE FROM RECYCLED PLASTIC OR POWDER COATED STEEL

11. FIRE PLUGS SHALL BE MARKED 'FP' AND HAVE A RED NON-REFLECTIVE TOP OF AT LEAST 225mm IN LENGTH, BLUE REFLECTIVE MARKER 36mmx20mm, AND BE INSTALLED IN SUCH A MANNER AS TO HAVE THE REFLECTIVE MARKERS VISIBLE TO THE DIRECTION OF APPROACHING TRAFFIC.

12. MARKER POSTS ARE TO BE AT LEAST 1000mm IN HEIGHT ABOVE THE FINISHED GROUND LEVEL AND BE INSTALLED IN SUCH A MANNER AS TO ENSURE THEY WILL NOT BE EASILY REMOVED (EG. CONCRETED OR TO MANUFACTURERS SPECIFICATION).

13. MARKER POSTS ARE TO BE LOCATED NEXT TO THE ASSET. DISTANCE TO THE MAIN (TO NEAREST 0.1m) MUST BE INCLUDED ON ALL POSTS THAT ARE NOT ADJACENT TO THE ASSET.

14. ANY MARKER POSTS WHICH HAVE A TAPERED TOP DESIGN TO INDICATE THE DIRECTION OF THE VALVE OR FIRE PLUG, MUST BE INSTALLED WITH THE TAPER FACING TOWARDS THE ASSET.

15. LETTERS 65mm HIGH & 40mm WIDE STENCILED & PAINTED BLACK NUMBERS 50mm HIGH & 25mm WIDE STENCILED & PAINTED BLACK

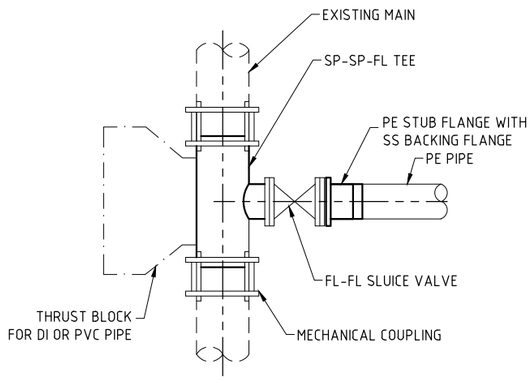

CUT-IN CONNECTION METHOD - PE

(USING MECHANICAL COUPLINGS)

REFER TO FIG. 5.6 WSA-03-2011

NOTES:

1. ALL DIMENSIONS IN MILLIMETRES.

2. VALVES DN 200 AND GREATER TO BE RESTRAINED WHERE SPECIFIED BY WATER AGENCY.

3. WHERE SPECIFIED BY WATER AGENCY INSTALL PLASTIC IDENTIFICATION COVERS. TOP OF IDENTIFICATION COVERS AND SURFACE BOX TO BE PAINTED WITH AN APPROVED ROAD MARKING PAINT. SEE TABLE 8.1 WSA 03-2011 -3.1 FOR COLOUR CODES.

4. TO PREVENT THE TRANSFER OF TRAFFIC LOAD TO THE MAIN, ENSURE SHROUD AND ANY SHROUD SUPPORT RING DOES NOT COME IN CONTACT WITH THE GATE VALVE OR HYDRANT.

5. INSTALL AN EXTENSION SPINDLE WHERE DEPTH FROM SURFACE LEVEL TO TOP OF GATE VALVE EXCEEDS 350.

6. DI PIPES AND FITTINGS WITH BITUMINOUS EXTERNAL COATING TO BE PROTECTED WITH POLYETHENE SLEEVING.

7. DEPTH OF MAIN MAY BE LOCALLY INCREASED TO ACHIEVE REQUIRED MINIMUM VALVE SPINDLE COVER.

8. ALL VALVES ARE TO BE ANTI CLOCKWISE CLOSING.

MARKER POST MARKING LEGEND:

AV	AIR VALVE	WM	WATERMAIN
SCV	SCOUR VALVE		SEWER
SV	STOP VALVE		BEND
FP	FIRE PLUG		

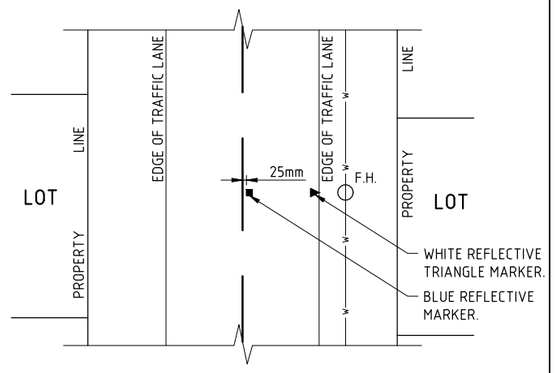

PLAN

RAISED REFLECTIVE ROAD MARKERS

NOT TO SCALE

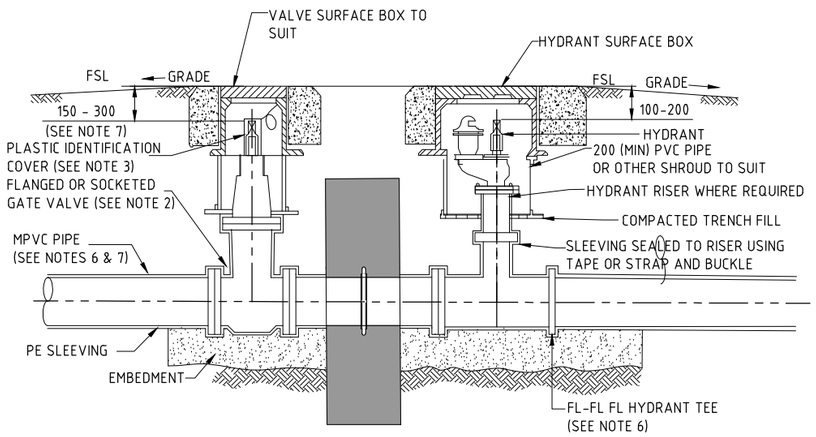

VALVE, PUDDLE FLANGE & HYDRANT AT STANDARD DEPTHS

REFER TO FIG. 8.2 WSA-03-2011

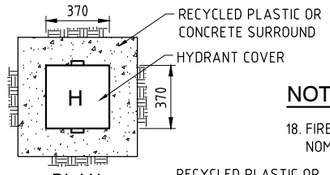

PLAN

NOTES:

18. FIRE PLUG ASSEMBLY TO BE 80mm NOM UNLESS OTHERWISE SPECIFIED

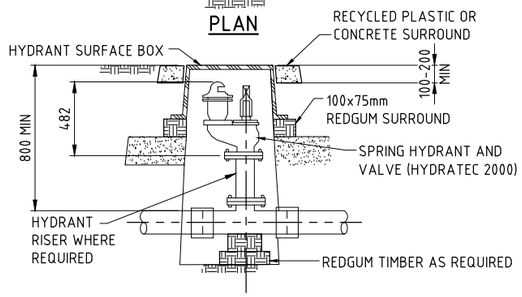

TYPE F.P.2

TYPICAL FIREPLUG DETAIL

NOTES:

16. BLUE RAISED REFLECTIVE ROAD MARKERS, WHEN USED, MUST COMPLY WITH AS 1906.3-1992 - RETROREFLECTIVE MATERIALS AND DEVICES FOR ROAD TRAFFIC CONTROL PURPOSES - RAISED PAVEMENT MARKERS (RETROREFLECTIVE AND NON-RETROREFLECTIVE) AND ARE TO BE INSTALLED 25mm FROM THE CENTRE LINE OF THE ROAD FOR SINGLE CARRIAGEWAYS ON THE HYDRANT SIDE OR 25mm FROM THE LANE MARKING LINE ON THE HYDRANT SIDE FROM MULTIPLE CARRIAGEWAYS AND DIVIDED ROADS.

17. WHITE REFLECTIVE TRIANGLE MARKERS MUST: MEET THE REQUIREMENTS OF AUSTRALIAN STANDARD AS 4049.2 2005 - PAINTS AND RELATED MATERIALS - PAVEMENT MARKING MATERIALS - THERMOPLASTIC PAVEMENT MARKING MATERIALS - FOR USE WITH SURFACE APPLIED GLASS BEADS OR AS PER WATER AGENCY PRODUCTS CATALOGUE OR USING VICROADS APPROVED MARKING PAINT. THEY ARE TO BE APPROXIMATELY 450 MM LONG BY 250 MM WIDE, THE TIP OF THE TRIANGLE MUST POINT TO THE LOCATION OF THE HYDRANT AND THEY ARE TO BE INSTALLED ON THE EDGE OF THE ROAD (KERB SIDE, BUT NOT ON THE KERB ITSELF).

Rv.	APPR.	DATE	REVISIONS
A	M.S.	23-04-2026	PRELIMINARY DESIGN - ISSUED FOR REVIEW

Crossco Consulting Pty Ltd All Rights Reserved 2026.
Copyright in the whole and every part of this drawing belongs to Crossco Consulting Pty Ltd and may not be used, sold, transferred, copied or reproduced in whole or in part in any manner or form or on any media, to any person other than by agreement with Crossco Consulting Pty Ltd.

This document is produced by Crossco Consulting Pty Ltd solely for the benefit of and use by the client in accordance with the terms of the retainer. Crossco Consulting Pty Ltd does not and shall not assume any responsibility or liability whatsoever to any third party arising out of any use or reliance by third party on the content of this document.

Crossco Consulting Pty Ltd
ABN: 88 135 548 110
154 Macleod St
P.O. Box 858
Bairnsdale Vic 3875
Tel:(03) 51526298
Fax (03) 51527222
Email: consult@crossco.com.au

DESIGNED:	R.S.	A1	DATUM: HEIGHT: AHD HORIZONTAL: ARBITRARY
DRAWN:	A.M.M.		
CHECKED:	S.G.		
APPROVED:	M.S.	SURVEY REF:	-
SCALE:	NOT TO SCALE	PLAN No:	-

XREF ATTACHED: R:\3082 EGW Boggy Creek Nowa Nowa\ACAD\Xref\3082 EGW TB.dwg
CAD FILE NAME: R:\3082 EGW Boggy Creek Nowa Nowa\ACAD\Drg\3082-5014.dwg

EAST GIPPSLAND WATER
EAST GIPPSLAND WATER CONTRACT #1251/B
BOGGY CREEK, NOWA NOWA
180 DIA. WATERMAIN UPGRADE WORKS

STANDARD DETAILS - SHEET 2 OF 4

DATE: APRIL 2026
SHEET 40 OF 17
DRAWING No: 2757/5039
Rv. A

			SOIL CLASSIFICATION																					
			50 kPa ALLOWABLE HORIZONTAL BEARING PRESSURE (AHBP)							100 kPa ALLOWABLE HORIZONTAL BEARING PRESSURE (AHBP)							200 kPa ALLOWABLE HORIZONTAL BEARING PRESSURE (AHBP)						
			SYSTEM TEST PRESSURE							SYSTEM TEST PRESSURE							SYSTEM TEST PRESSURE						
DN	ANGLE/SIZE	FITTING TYPE	1000	1100	1200	1300	1400	1500	1600	1000	1100	1200	1300	1400	1500	1600	1000	1100	1200	1300	1400	1500	1600
100	6°/11.25°	BEND	MIN	MIN	MIN	MIN	MIN	MIN	MIN	MIN	MIN	MIN	MIN	MIN	MIN	MIN	MIN	MIN	MIN	MIN	MIN	MIN	MIN
100	22.5°	BEND	MIN	MIN	MIN	MIN	MIN	MIN	MIN	MIN	MIN	MIN	MIN	MIN	MIN	MIN	MIN	MIN	MIN	MIN	MIN	MIN	MIN
100	45°	BEND	MIN	0.19	0.21	0.23	0.25	0.26	0.28	MIN	MIN	MIN	MIN	MIN	MIN	MIN	MIN	MIN	MIN	MIN	MIN	MIN	MIN
100	60°	BEND	0.23	0.25	0.28	0.30	0.32	0.34	0.37	MIN	MIN	MIN	MIN	MIN	MIN	0.18	MIN	MIN	MIN	MIN	MIN	MIN	MIN
100	90°	BEND	0.32	0.36	0.39	0.42	0.45	0.49	0.52	MIN	MIN	0.19	0.21	0.23	0.24	0.26	MIN	MIN	MIN	MIN	MIN	MIN	MIN
100		TEE, DEAD END	0.23	0.25	0.28	0.30	0.32	0.34	0.37	MIN	MIN	MIN	MIN	MIN	MIN	0.18	MIN	MIN	MIN	MIN	MIN	MIN	MIN
100		VALVE	0.30	0.30	0.30	0.30	0.32	0.34	0.37	0.30	0.30	0.30	0.30	0.30	0.30	0.30	0.30	0.30	0.30	0.30	0.30	0.30	0.30
150	6°/11.25°	BEND	MIN	MIN	MIN	MIN	MIN	MIN	MIN	MIN	MIN	MIN	MIN	MIN	MIN	MIN	MIN	MIN	MIN	MIN	MIN	MIN	MIN
150	22.5°	BEND	0.19	0.21	0.23	0.24	0.26	0.28	0.30	MIN	MIN	MIN	MIN	MIN	MIN	MIN	MIN	MIN	MIN	MIN	MIN	MIN	MIN
150	45°	BEND	0.37	0.41	0.44	0.48	0.52	0.55	0.59	0.18	0.20	0.22	0.24	0.26	0.28	0.30	MIN	MIN	MIN	MIN	MIN	MIN	MIN
150	60°	BEND	0.48	0.53	0.58	0.63	0.68	0.72	0.77	0.24	0.27	0.29	0.31	0.34	0.36	0.39	MIN	MIN	MIN	MIN	MIN	0.18	0.19
150	90°	BEND	0.68	0.75	0.82	0.89	0.96	1.02	1.09	0.34	0.38	0.41	0.44	0.48	0.51	0.55	MIN	0.19	0.20	0.22	0.24	0.26	0.27
150		TEE, DEAD END	0.48	0.53	0.58	0.63	0.68	0.72	0.77	0.24	0.27	0.29	0.31	0.34	0.36	0.39	MIN	MIN	MIN	MIN	MIN	0.18	0.19
150		VALVE	0.48	0.53	0.58	0.63	0.68	0.72	0.77	0.30	0.30	0.30	0.31	0.34	0.36	0.39	0.30	0.30	0.30	0.30	0.30	0.30	0.30
150	DN100	TAPER	0.30	0.30	0.30	0.33	0.35	0.38	0.41	0.30	0.30	0.30	0.30	0.30	0.30	0.30	0.30	0.30	0.30	0.30	0.30	0.30	0.30
225	6°/11.25°	BEND	0.20	0.22	0.24	0.26	0.28	0.30	0.32	MIN	MIN	MIN	MIN	MIN	MIN	MIN	MIN	MIN	MIN	MIN	MIN	MIN	MIN
225	22.5°	BEND	0.40	0.44	0.48	0.52	0.56	0.60	0.64	0.20	0.22	0.24	0.26	0.28	0.30	0.32	MIN	MIN	MIN	MIN	MIN	MIN	MIN
225	45°	BEND	0.79	0.87	0.95	1.03	1.11	1.19	1.27	0.40	0.43	0.47	0.51	0.55	0.59	0.63	0.20	0.22	0.24	0.26	0.28	0.30	0.32
225	60°	BEND	1.03	1.14	1.24	1.34	1.45	1.55	1.65	0.52	0.57	0.62	0.67	0.72	0.77	0.83	0.26	0.28	0.31	0.34	0.36	0.39	0.41
225	90°	BEND	1.46	1.61	1.75	1.90	2.05	2.19	2.34	0.73	0.80	0.88	0.95	1.02	1.10	1.17	0.37	0.40	0.44	0.47	0.51	0.55	0.58
225		TEE, DEAD END	1.03	1.14	1.24	1.34	1.45	1.55	1.65	0.52	0.57	0.62	0.67	0.72	0.77	0.83	0.26	0.28	0.31	0.34	0.36	0.39	0.41
225		VALVE	1.03	1.14	1.24	1.34	1.45	1.55	1.65	0.52	0.57	0.62	0.67	0.72	0.77	0.83	0.30	0.30	0.31	0.34	0.36	0.39	0.41
225	DN100	TAPER	0.80	0.88	0.96	1.04	1.13	1.21	1.29	0.40	0.44	0.48	0.52	0.56	0.60	0.64	0.30	0.30	0.30	0.30	0.30	0.30	0.32
225	DN150	TAPER	0.55	0.61	0.66	0.72	0.77	0.83	0.88	0.30	0.30	0.33	0.36	0.39	0.41	0.44	0.30	0.30	0.30	0.30	0.30	0.30	0.30
300	6°/11.25°	BEND	0.36	0.40	0.43	0.47	0.50	0.54	0.57	MIN	0.20	0.22	0.23	0.25	0.27	0.29	MIN	MIN	MIN	MIN	MIN	MIN	MIN
300	22.5°	BEND	0.72	0.79	0.86	0.93	1.00	1.07	1.14	0.36	0.39	0.43	0.46	0.50	0.54	0.57	MIN	0.20	0.21	0.23	0.25	0.27	0.29
300	45°	BEND	1.40	1.54	1.68	1.82	1.96	2.10	2.24	0.70	0.77	0.84	0.91	0.98	1.05	1.12	0.35	0.39	0.42	0.46	0.49	0.53	0.56
300	60°	BEND	1.83	2.02	2.20	2.38	2.57	2.75	2.93	0.92	1.01	1.10	1.19	1.28	1.37	1.47	0.46	0.50	0.55	0.60	0.64	0.69	0.73
300	90°	BEND	2.59	2.85	3.11	3.37	3.63	3.89	4.15	1.30	1.43	1.56	1.68	1.81	1.94	2.07	0.65	0.71	0.78	0.84	0.91	0.97	1.04
300		TEE, DEAD END, VALVE	1.83	2.02	2.20	2.38	2.57	2.75	2.93	0.92	1.01	1.10	1.19	1.28	1.37	1.47	0.46	0.50	0.55	0.60	0.64	0.69	0.73
300	DN100	TAPER	1.60	1.76	1.92	2.08	2.25	2.41	2.57	0.80	0.88	0.96	1.04	1.12	1.20	1.28	0.40	0.44	0.48	0.52	0.56	0.60	0.64
300	DN150	TAPER	1.35	1.49	1.62	1.76	1.89	2.03	2.16	0.68	0.74	0.81	0.88	0.95	1.01	1.08	0.34	0.37	0.41	0.44	0.47	0.51	0.54
300	DN225	TAPER	0.80	0.88	0.96	1.04	1.12	1.20	1.28	0.40	0.44	0.48	0.52	0.56	0.60	0.64	0.30	0.30	0.30	0.30	0.30	0.30	0.32

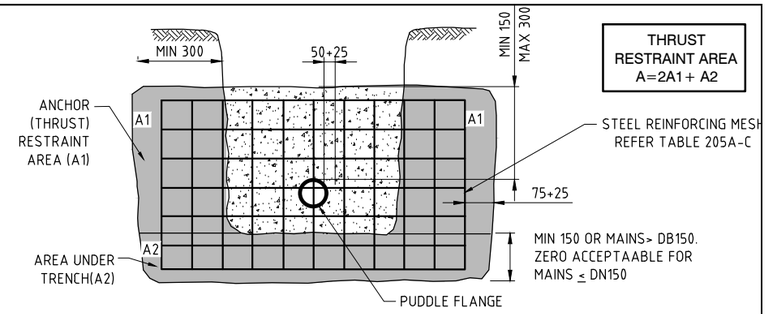

INLINE THRUST RESTRAINT DETAIL -INLINE THRUST (ELEVATION))

(REFER TO FIG.205A-H WSA-03-2011)
NOT TO SCALE

ANCHOR BLOCK NOTES

1. ANCHOR BLOCKS MEMBRANE - THE CONTACT POINTS BETWEEN THE PE PHE, OR FITTINGS AND THRUST BLOCKS MUST BE PROTECTED TO PREVENT ABRASION OF PE. RUBBER OR COMPRESSIBLE PE OR GEO TEXTILE SHEETING MAY BE USED FOR THIS PURPOSE

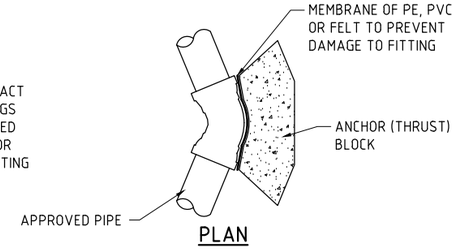

PLAN

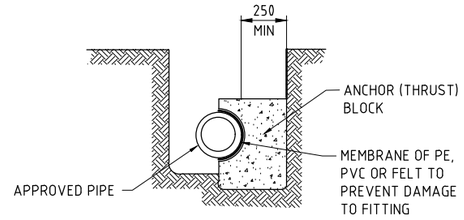

ELEVATION

ANCHOR BLOCK DETAIL - HORIZONTAL BEND

(REFER TO FIG. 7.12 WSA-03-2011)
NOT TO SCALE

NOTES:

1. WHERE AHBP<50kPa, THE WATER AGENCY MUST BE CONSULTED WHEN DESIGNING THE PIPELINE.
2. FOR THRUST RESTRAINT ON PRESSURE PIPELINES GREATER THAN DN300,THE WRWA THRUST RESTRAINT CALCULATOR SHALL BE USED TO DETERMINE THE MINIMUM TRUST AREA.
3. INTERPOLATION BETWEEN TEST PRESSURES AND/OR SOIL CLASSIFICATION MAY OCCUR,
4. "MIN" REFERS TO MINIMUM THRUST RESTRAINT WHICH IS BASED ON THE TIMBER/RECLYCLED PLASTIC THRUST RESTRAINT AREA OF $0.18m^2$ WHICH IS BASED ON 0.6m x 0.30m BLOCKS AS DEFINED IN MRWA-W-206.
5. FOR DETERMINING TEE THRUST BLOCK AREAS, USE THE SIZE OF THE TEE'S OFFTAKE (BRANCH).
6. IN LINE THRUST BLOCK (VALVES/TAPERS) SHALL HAVE MIN THRUST AREA OF $0.30m^2$ AND BE CONSTRUCTED OF REINFORCED CONCRETE.
7. THE MINIMUM THRUST AREA FOR TAPER THRUST BLOCKS TO BE EQUAL TO THE DIFFERENCE BETWEEN THE TRUST AREAS FOR DEADENDS OF EQUIVALENT DIAMETER TO THOSE EACH SIDE OF TAPER.
8. FOR TEST PRSSURE>1600kPa, INCREASE THE MINIMUM THRUST AREA BY THE RATIO OF THE TEST PRESSURE TO THE 1600kPa AREA.
9. FORCE ONLY TO BE APPLIED TO CONCRETE THRUST BLOCK AFTER THE CURING TIME OF THE CONCRETE HAS LAPSED

THRUST BLOCK BEARING AREA BASED ON 1600KPA & 100KPA SOIL PRESSURE			
SIZE DN	FITTING	BEARING AREA (m2)	No.
150	TEE	0.39	4
150	PUDDLE FLANGE	0.39	5
150	VALVE	0.39	5
150	BLANK END	0.39	1

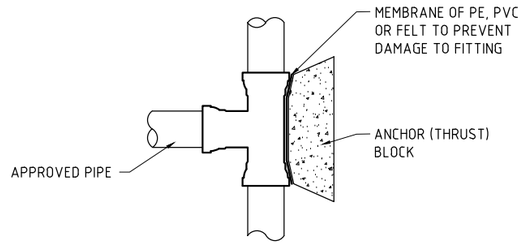

PLAN

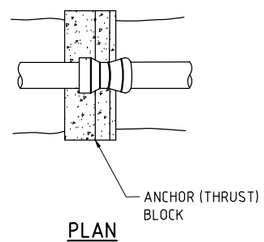

PLAN

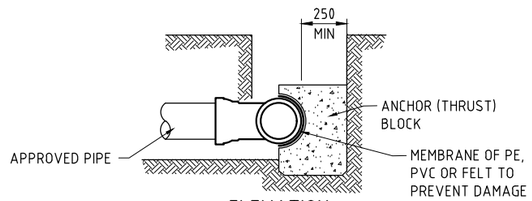

ELEVATION

ANCHOR BLOCK DETAIL - HORIZONTAL TEE

(REFER TO FIG. 7.12 WSA-03-2011)
NOT TO SCALE

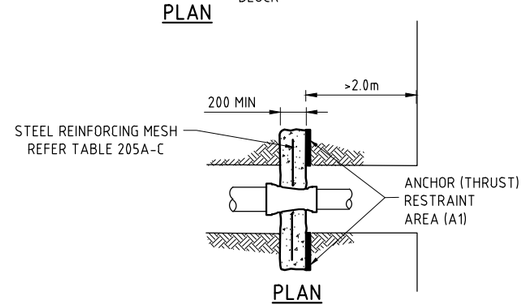

PLAN

INLINE THRUST RESTRAINT DETAIL -INLINE THRUST

(REFER TO FIG.205A-I WSA-03-2011)
NOT TO SCALE

TABLE 205A-B IN LINE RESTRAINT STEEL REINFORCEMENT SELECTION (SINGLE MAIN) DETAILS

THRUST RESTRAINT AREA	MESH (REINFORCEMENT) REQUIREMENTS
$0.3m^2$	NONE IF RESTRAINT IS >400 THICK OTHERWISE 1 LAYER OF SL82
$0.31m^2$ TO $1.5m^2$	1 LAYER OF SL82
$1.51m^2$ TO $3.0m^2$	1 LAYER OF RL1018 OR 2 LAYERS OF SL82
$>3.0m^2$	2 LAYERS OF SL82

Rv.	APPR.	DATE	REVISIONS
A	M.S.	23-04-2026	PRELIMINARY DESIGN - ISSUED FOR REVIEW

Crossco Consulting Pty Ltd All Rights Reserved 2026.
Copyright in the whole and every part of this drawing belongs to Crossco Consulting Pty Ltd and may not be used, sold, transferred, copied or reproduced in whole or in part in any manner or form or on any media, to any person other than by agreement with Crossco Consulting Pty Ltd.

This document is produced by Crossco Consulting Pty Ltd solely for the benefit of and use by the client in accordance with the terms of the retainer. Crossco Consulting Pty Ltd does not and shall not assume any responsibility or liability whatsoever to any third party arising out of any use or reliance by third party on the content of this document.

Crossco Consulting Pty Ltd
ABN: 88 135 548 110
154 Macleod St
P.O. Box 858
Bairnsdale Vic 3875
Tel:(03) 51526298
Fax (03) 51527222
Email: consult@crossco.com.au

DESIGNED:	R.S.	A1	DATUM: HEIGHT: AHD HORIZONTAL: ARBITRARY
DRAWN:	A.M.M.		
CHECKED:	S.G.		
APPROVED:	M.S.	SURVEY REF:	-
SCALE:	NOT TO SCALE	PLAN No:	-

XREF ATTACHED: R:\3082 EGW Boggy Creek Nowa Nowa\ACAD\Xref\3082 EGW TB.dwg
CAD FILE NAME: R:\3082 EGW Boggy Creek Nowa Nowa\ACAD\Drg\3082-5015.dwg

EAST GIPPSLAND WATER
EAST GIPPSLAND WATER CONTRACT #1251/B
BOGGY CREEK, NOWA NOWA
180 DIA. WATERMAIN UPGRADE WORKS

STANDARD DETAILS - SHEET 3 OF 4

DATE: APRIL 2026
SHEET 16 OF 17
DRAWING No: 3082/5015
Rv. A

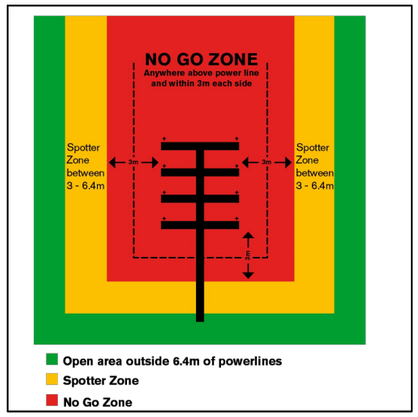

NO GO ZONES AND CLEARANCES

1. THE DOTTED LINE IN DIAGRAM 1 - NO GO ZONES AND CLEARANCES IS A GENERAL REPRESENTATION OF THE MINIMUM CLEARANCES FROM ELECTRICAL ASSETS. YOU MUST REFER TO TABLE A - LIMITS OF APPROACH FOR THE ACTUAL MINIMUM CLEARANCE DEPENDING ON THE TYPE OF ASSET. IF THERE IS ANY DOUBT ABOUT THE TYPE OF OVERHEAD ASSET, CONTACT THE ASSET OWNER .
2. REFER TO 'WORKSAFE' A HANDBOOK FOR WORKPLACES " USING EARTHMOVING EQUIPMENT NEAR OVERHEAD ELECTRICAL ASSETS" WHEN UNDERTAKING CONSTRUCTION WORKS WITHIN THE VICINITY OVER OVERHEAD POWERLINES

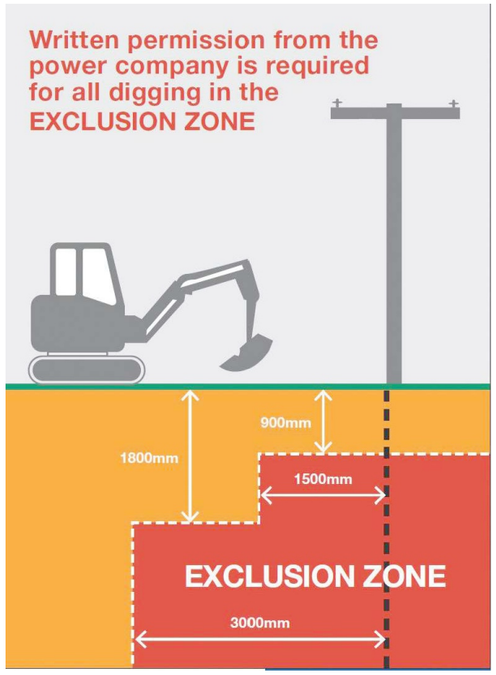

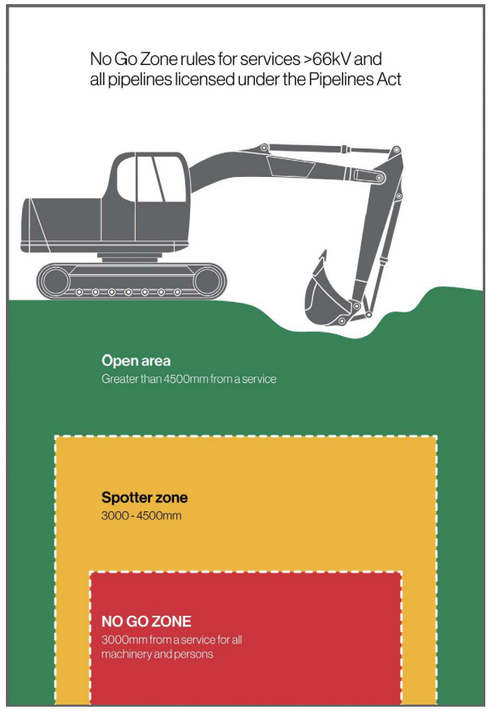

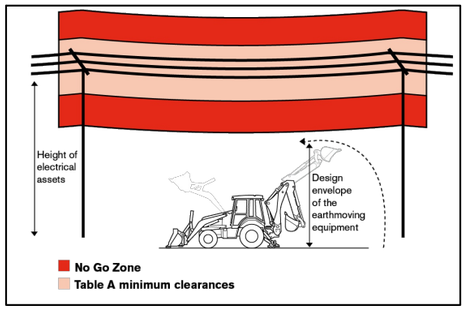

WORKS OUT SIDE OF NO GO ZONE

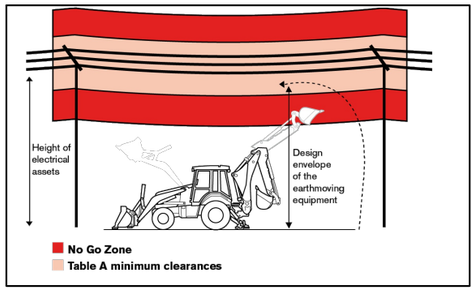

WORKS WITHIN NO GO ZONE

TABLE A: LIMITS OF APPROACH

TYPES OF OVERHEAD ASSETS	MINIMUM CLEARANCE FROM ASSET
HIGH VOLTAGE ELECTRICITY CONDUCTORS UP TO AND INCLUDING 66 KV	2000mm
UN-INSULATED LOW VOLTAGE ELECTRICITY CONDUCTORS	1000mm
INSULATED LOW VOLTAGE ELECTRICITY CONDUCTORS, GREATER THAN 50 V BUT LESS THAN 1000 V	500mm
COMMUNICATIONS CABLING – BROADBAND AND TELEPHONY	300mm

EXCAVATION NEAR POLES AND STAY WIRES STRUCTURES:

1. NO EXCAVATION IS PERMITTED DEEPER THAN 900mm AND WITHIN 1500mm (1.5m) OF THE POLE OR WHERE STAY WIRES/RODS ENTER THE GROUND.
2. NO EXCAVATION DEEPER THAN 1800mm (1.8m) AND WITHIN 3000mm (3m) OF THE SUPPORT STRUCTURE. FOR ANY EXCAVATION WITHIN THE EXCLUSION ZONE PERMISSION FROM THE POWER COMPANY IS REQUIRED.
3. DUE TO THE VARIETY OF EQUIPMENT INSTALLED ON POLES ANY EXCAVATION GREATER THAT 300mm IN DEPTH WITHIN 3000mm OF THE POLE MAY AFFECT ITS STABILITY. CONTACT WITH THE SERVICE OWNER TO DISCUSS THE WORK REQUIRED AS SUPPORT OF THE POLE MAY BE REQUIRED.

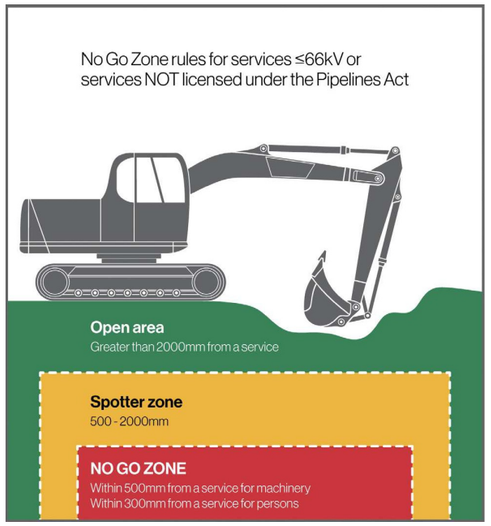

UNDERGROUND NO GO ZONE:

1. NO GO ZONE: WORKS WITHIN THIS AREA REQUIRES A NO GO ZONE SITE ASSESSMENT AND A PERMIT TO WORK/PERMISSION AND COMPLIANCE WITH THE PERMIT CONDITIONS.
2. SPOTTER ZONE: WORKS WITHIN THIS AREA REQUIRES A NO GO ZONE SITE ASSESSMENT AND POSSIBLE PERMIT TO WORK

Rv.	APPR.	DATE	REVISIONS
A	M.S.	23-04-2026	PRELIMINARY DESIGN - ISSUED FOR REVIEW

© Crossco Consulting Pty Ltd All Rights Reserved 2026.
Copyright in the whole and every part of this drawing belongs to Crossco Consulting Pty Ltd and may not be used, sold, transferred, copied or reproduced in whole or in part in any manner or form or on any media, to any person other than by agreement with Crossco Consulting Pty Ltd.

This document is produced by Crossco Consulting Pty Ltd solely for the benefit of and use by the client in accordance with the terms of the retainer. Crossco Consulting Pty Ltd does not and shall not assume any responsibility or liability whatsoever to any third party arising out of any use or reliance by third party on the content of this document.

Crossco Consulting Pty Ltd
ABN: 88 135 548 110
154 Macleod St
P.O. Box 858
Bairnsdale Vic 3875
Tel:(03) 51526298
Fax (03) 51527222
Email: consult@crossco.com.au

DESIGNED:	R.S.	A1	DATUM: HEIGHT: AHD HORIZONTAL: ARBITRARY
DRAWN:	A.M.M.		
CHECKED:	S.G.		
APPROVED:	M.S.	SURVEY REF:	-
SCALE:	NOT TO SCALE	PLAN No:	-

XREF ATTACHED: R:\3082 EGW Boggy Creek Nowa Nowa\ACAD\Xref\3082 EGW TB.dwg
CAD FILE NAME: R:\3082 EGW Boggy Creek Nowa Nowa\ACAD\Drg\3082-5016.dwg

EAST GIPPSLAND WATER
EAST GIPPSLAND WATER CONTRACT #1251/B
BOGGY CREEK, NOWA NOWA
180 DIA. WATERMAIN UPGRADE WORKS

STANDARD DETAILS - SHEET 4 OF 4

DATE: APRIL 2026
SHEET 17 OF 17
DRAWING No: 3082/5016
Rv. A